KM 8482 FL
Induction hob with onset controls
800 mm | Individual cooking zones and PowerFlex XL cooking area



EAN: 4002516971573 / Material number: 12944660 /
Old Material Number: 26184821GB

- 4 cooking zones incl. 1 powerful PowerFlex XL cooking area
- Precise settings via SingleSlide central slider incl. networking
- Shortest heat-up times thanks to Booster level
- A width of 800 mm for surface-mounted or flush-fit installation

KM 8482 FL

Induction hob with onset controls

800 mm | Individual cooking zones and PowerFlex XL cooking area

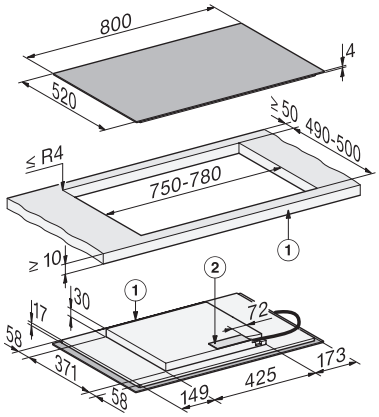

KM8482FL surface-mounted (*Fußnote) Installation drawing

1) front, 2) Mains connection box, The mains connection cable (L = 1440 mm) is enclosed loose

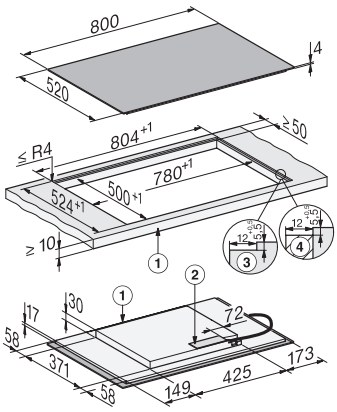

KM8482FL flush (*Fußnote) (Installation drawing)

1) front, 2) Mains connection box, The mains connection cable (L = 1440 mm) is enclosed loosely, 3) Step milling natural stone worktop, 4) Wooden strip 12 mm (no supplied accessories)