H 7890 BP
90 cm wide oven
seamless design with food probe and BrilliantLight.



- Large touch display with movement sensor – M Touch + MotionReact
- An eye on what's cooking anywhere, any time – camera in the oven
- Minimal cleaning effort – Pyrolytic cleaning equipment& PyroFit
- Especially light dough and nicely browned crusts – Moisture plus
- Fast heating and even heat distribution – TwinPower

EAN: 4002516133230 / Material number: 11106120 / Old Material Number: 22789045D

General information	
Model identifier	H 7890 BP
Manufacturer material number	11106120
EAN number	4002516133230
Marketing class	Diamond
Construction type and design	
PureLine	•
Construction type and design	
Built-in oven	•
Colour	Stainless steel/Clean Steel
Convenience features	
Rapid heat-up	•
Pre-heating	•
Food probe	Without cable
Keeping warm	•
Crisp function	•
Rotisserie motor	•
Operating modes	
Defrosting	•
Auto roast	•
Economy grill	•
Moisture plus with Auto roast	•
Fan plus	•
Moisture plus with Fan plus	•
Intensive bake	•
Moisture plus with Intensive bake	•
Moisture plus	•
Moisture plus with Conventional heat	•
Low temperature cooking	•
Conventional heat	•
Top heat	•
Bottom heat	•
Fan grill	•
Special applications	•
Grill	•
Eco hot air	•
Automatic programmes	•
Country-specific automatic programmes	•
User convenience	
Networking with Miele@home	•
Display	M Touch
FoodView	•
SoftOpen	•
SoftClose	•
MultiLingua	•
MyMiele	•
Help function	•
3D control panel	•

Miele

H 7890 BP
90 cm wide oven
seamless design with food probe and BrilliantLight.



EAN: 4002516133230 / Material number: 11106120 / Old Material Number: 22789045D

Programmable timed steam injection	•
Polyphonic buzzers	•
Time of day display	•
Clock synchronisation	•
Date display	•
Minute minder	•
Programmable start of cooking duration	•
Programmable end of cooking duration	•
Programmable cooking duration	•
Actual temperature display	•
Target temperature display	•
Buzzer when desired temperature is reached	•
Recommended temperature	•
User programmes	•
Sabbath programme	•
Individual settings	•
Efficiency	
Energy efficiency class (A+++ – D)	A
Automatic residual heat utilisation	•
Power rating in off mode in W	0,3
Power rating in standby mode in W	0,8
Power rating in networked standby in W	2,0
Time until automatic switch to standby in min	20
Time until automatic switch to networked standby in min	20
Time until automatic switch to off mode in min	20
Cleaning and care	
Stainless steel/CleanSteel finish	•
Pyrolytic self-cleaning	•
Catalyser	•
Hinged grill element	•
CleanGlass door	•
Steam techn./water supply	
Steam generator power in kW	1,10
Fresh water container volume in l	0,3
Suction tube for drawing in water	•
Safety	
Appliance cooling system and touch-cool front	•
Safety switch-off	•
System lock	•
Door lock during pyrolytic cleaning	•
Sensor lock	•
Technical data	
Oven compartment volume in l	90
No. of shelf levels	3
Numbered shelf levels	•
Oven light	BrilliantLight
TwinPower hot air fan	•
Plug type	5-pole without plug
Niche width min. in mm	860

H 7890 BP
90 cm wide oven
seamless design with food probe and BrilliantLight.



EAN: 4002516133230 / Material number: 11106120 / Old Material Number: 22789045D

Niche width max. in mm	868
Niche height min. in mm	475
Niche depth in mm	550
Appliance dimensions (W x H x D) in mm	895 x 478 x 568
Weight in kg	74,0
Total rated load in kW	5,60
Length of supply lead in m	1,80
Voltage in V	220-240
Frequency in Hz	50
Fuse rating in A	16
Number of phases	3
Replacing lamps	Service
Accessories included	
Universal tray with PerfectClean	2
Baking and roasting rack PyroFit	2
PyroFit FlexiClip runners	1
Wireless food probe	1
Removable PyroFit side runners (pair)	1
Grilling and roasting insert with PerfectClean	1
Descaling tablets	2
Available display languages	
Available display languages via MultiLingua	□□□□□□□□, □□, □□□□, deutsch, dansk, english, suomi, français, ελληνικά, italiano, □□□□, □□□□, hrvatski, bahasa malaysia, nederlands, norsk, polski, português, română, русский, svenska, srpski, slovenčina, slovenščina, español, čeština, türkçe, українська, magyar

H 7890 BP
90 cm wide oven
seamless design with food probe and BrilliantLight.

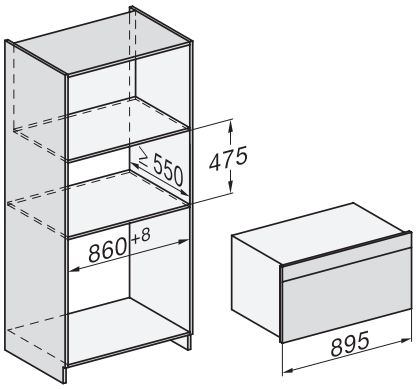

built-in H7000 90, installation drawing

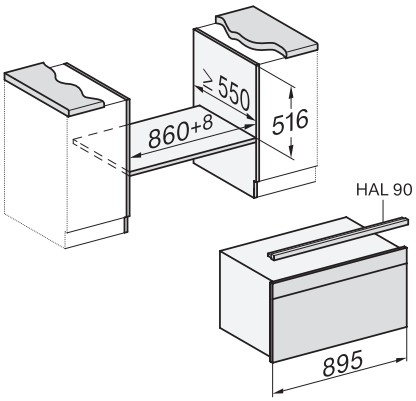

built-in H7000 90 build-under, installation drawing

If the oven is to be installed under a hob, follow the instructions for installing the hob and the height of the hob.

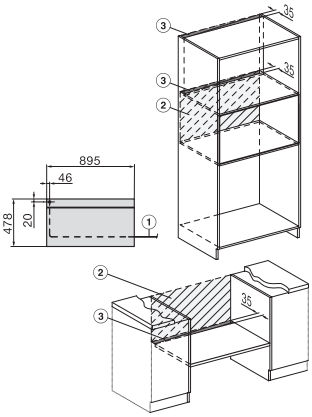

installation H7000 90, installation drawing

1) Mains connection cable, L=2000 mm, 2) No connection in this area, 3) Lüftungsausschnitt min. 150 cm²

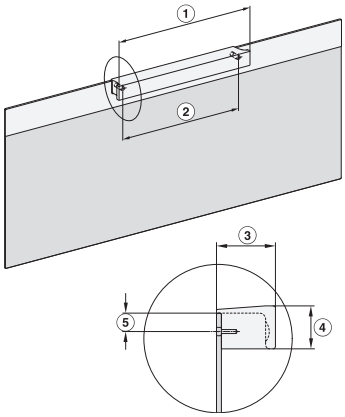

H7890BP, installation drawings

1) 350 mm, 2) 300 mm, 3) 48 mm, 4) 35 mm, 5) 16.5 mm

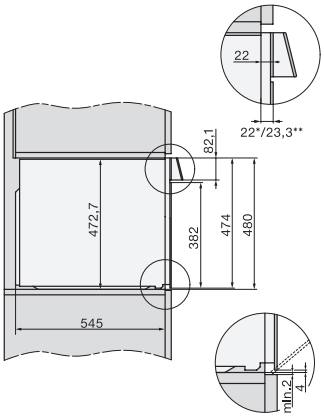

side view H7000 90, installation drawing

22 mm – glass, 23,3 mm – metal

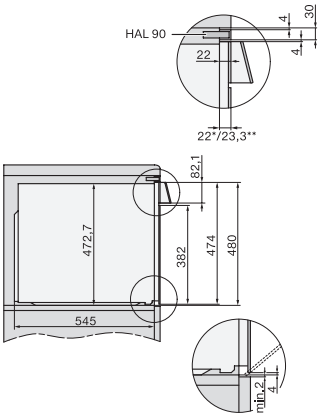

side view H7000 90 build-under, installation drawings

22 mm – glass, 23,3 mm – metal