KWTS 4785 F
Freestanding wine unit
with PresenterFrame, two separate temperature zones and ActiveHumidity.



- Your favourite wines are presented in style thanks to PresenterFrame
- Perfect drinking and storage temperatures thanks to separate temperature zones
- Clever networking opens up new possibilities – Miele@home
- Perfect regulation of humidity with ActiveHumidity
- UV-resistant insulated glass perfectly protects your wine
- -

EAN: 4002516747017 / Material number: 12443630 /
Old Material Number: 39478562AUS

General information	
Model identifier	KWTS 4785 F
Manufacturer material number	12443630
EAN number	4002516747017
Marketing class	Platinum
Appliance category	
Wine conditioning unit	•
Construction type	
Freestanding appliance	•
Door hinge	right
Convertible door hinging	•
Design	
Casing colour	black
Front colour	Obsidian Black glass
Wine compartment lighting	continuously dimmable LED
User convenience	
Networking with Miele@home	•
Door opening aid	SideOpen
ActiveHumidity	•
SoftClose	•
Silence system	•
Total number of shelves	8
Number of shelves	6
Shelf material	Beechwood
NoteBoard	Yes
PresenterFrame	•
Low-vibration storage	•
Control system	
Operating concept	FreshTouch
No. of temperature zones	2
Min. temperature setting range in °C	5
Max. temperature setting range in °C	20
Sabbath mode	•
Fridge/Fridge section	
Dry back wall	BlackSteel
Safety	
Lock function	•
Acoustic door alarm	•
Acoustic temperature alarm	•
Optical door alarm	•
Optical temperature alarm	•
Technical data	
Appliance width in mm	597
Appliance height in mm	1854
Appliance depth in mm	694
Weight in kg	100,9
Climate range	SN-ST

KWTS 4785 F
Freestanding wine unit
with PresenterFrame, two separate temperature zones and ActiveHumidity.



EAN: 4002516747017 / Material number: 12443630 /
Old Material Number: 39478562AUS

Wine compartment in l	368
Total usable capacity in l	368
0.75 l Bordeaux bottle capacity (no. of bottles)	153 bottles
Current consumption (mA)	1200
Voltage in V	220-240
Fuse rating in A	10
Number of phases	1
Frequency in Hz	50-60
Length of supply lead in m	2,0
Accessories included	
Water filter	Nein
White chalk pen	•

KWTS 4785 F
Freestanding wine unit
with PresenterFrame, two separate temperature zones and ActiveHumidity.

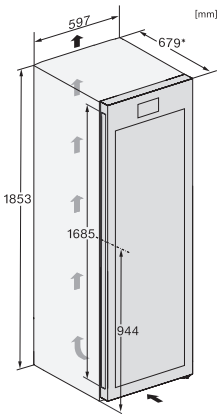

KWTS4785F obsw, Rioja, installation sketch

*To achieve the declared energy consumption, the spacers supplied with the unit must be used. This increases the depth of the unit by approx. 15 mm. The unit is fully functional without the use of the spacers, but has a slightly higher energy consumption.

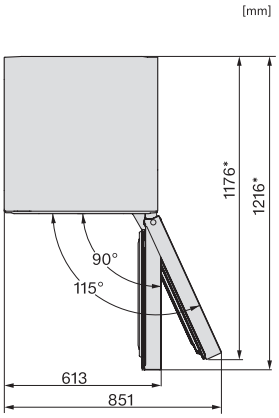

KWTS4785F obsw, Rioja, top view

*To achieve the declared energy consumption, the spacers supplied with the unit must be used. This increases the depth of the unit by approx. 15 mm. The unit is fully functional without the use of the spacers, but has a slightly higher energy consumption.

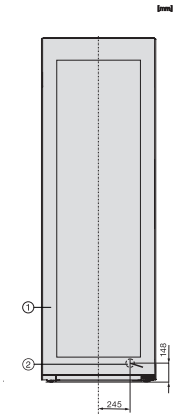

KWTS4785F obsw, Rioja, installation

1. View from the front, 2. Mains connection cable, L = 2200 mm

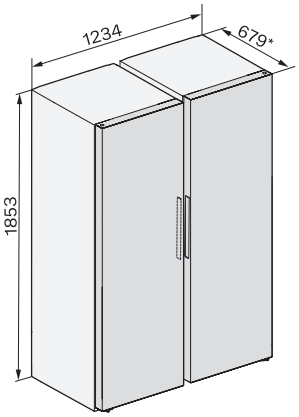

KWTS4785F, KS4887DD, KWTS4785F, KS4383ED, KWTS4785F, KWNS4784DE, KWNS4784DE, KS4887DD, installation sketch

*To achieve the declared energy consumption, the spacers supplied with the unit must be used. This increases the depth of the unit by approx. 15 mm. The unit is fully functional without the use of the spacers, but has a slightly higher energy consumption.

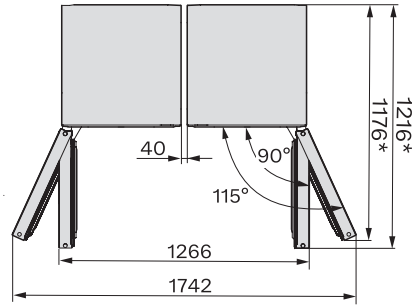

KWTS4785F, KS4887DD, KWTS4785F, KS4383ED, KWTS4785F, KWNS4784DE, KWNS4784DE, KS4887DD,top view

*To achieve the declared energy consumption, the spacers supplied with the unit must be used. This increases the depth of the unit by approx. 15 mm. The unit is fully functional without the use of the spacers, but has a slightly higher energy consumption.