WWB360 WCS PWash&8kg
W1 front-loader washing machine:
A -20 %* I 8 kg I 1400 rpm I QuickPowerWash I Miele@home I CapDosing



EAN: 4002516867371 / Material number: 12721170 / Old Material Number: 11WB3601GB

- Tested for 20 years of perfect laundry care*
- Save even more energy with A -20 %**
- QuickPowerWash ensures fast, efficient results in just 49 minutes***
- Complete app control of your washing machine with Miele@home****
- Exclusive CapDosing range for different fabrics and stains*****

* During the development phase of the W1 / W2 washing machine series, Miele tested models and core components in 5000 wash loads (= 5 wash loads per week for 50 weeks per year) in various programmes. More: miele.com/20years

** 20 % more economical than the threshold value (52) for energy efficiency class A.

*** This applies to all Miele washing machines that enable the process and machine-related parameters presented in the summary of the WL 1110/18 test report to be implemented.

**** This is a separate digital offer from Miele & Cie. KG. The range of functions can vary depending on the model and the country. Acceptance of the Terms and Conditions and Privacy Policy for Miele digital products and services in the Miele app required. Miele reserves the right to change or discontinue the digital offer at any time.

***** Patent EP 2 365 120

General information	
Model identifier	WWB360 WCS PWash&8kg
Manufacturer material number	12721170
EAN number	4002516867371
Marketing class	Gold
Construction type	
Suitable for stacking	•
Door hinging	right
Side-by-side	•
Slot-in	•
Model	
Product brand	W1 White Edition
Front-loader	•
Spinning	
Max. spin speed	1400
Rinse hold	•
Without spin function	•
Design	
Appliance colour	Lotus white
Control panel colour	Lotus white
Door design	Obsidian black with white ring
Rotary selector colour	Lotus White
Control panel version	5° inclined
Control type	Rotary control
Display	DirectSensor white, 7 segment
Cleaning performance	
Innovative PowerWash technology	•
CapDosing portioned dispensing	•
Gentle laundry care	
Honeycomb drum	•
Load in kg	8
User convenience	
Networking with Miele@home	•
Delay start up to 24 hours	•
Time left display	•
AutoClean detergent drawer	•
AddLoad	•
Efficiency	
Energy efficiency class (A–G)	A
More economical than the threshold value (52) for energy efficiency class A	20%
Weighted energy consumption per 100 operating cycles for the wash cycle in kWh	38
Weighted water consumption per cycle in l	48
Spin efficiency class (A–G)	B
Acoustic airborne noise emission class (spin cycle; A–D)	A

WWB360 WCS PWash&8kg
W1 front-loader washing machine:
A -20 %* I 8 kg I 1400 rpm I QuickPowerWash I Miele@home I CapDosing



EAN: 4002516867371 / Material number: 12721170 / Old Material Number: 11WB3601GB

Sound emissions during spin cycle in dB(A) re 1 pW	72
Duration of the “ECO 40–60” programme at nominal capacity	219
Power rating in off mode in W	0,30
Power rating in networked standby in W	0,60
Low temperature wash "Cold" and "20 °C"	•
Automatic load control	•
Flow meter	•
Foam sensing	•
ProfiEco motor	•
Wash programmes	
QuickPowerWash	•
Cottons (coloureds)	•
Minimum iron	•
Delicates	•
Shirts	•
Woollens (hand-washable)	•
Express 20	•
Dark garments / Denim	•
Proofing	•
Drain / Spin	•
ECO 40-60	•
Washing extras	
Short	•
Pre-wash	•
Water plus	•
Additional rinse cycle	•
Pre-ironing with steam	•
Buzzer	•
Safety	
Water protection system	Watercontrol-System
Safety lock	•
PIN-Code	•
Optical interface	•
Technical data	
Dimensions (H x W x D) in mm	850 x 596 x 643
Dimensions in mm (width)	596
Dimensions in mm (height)	850
Dimensions in mm (depth)	643
Appliance depth in mm with opened door	1077
Weight in kg	80
Voltage in V	220-240
Fuse rating in A	13
Frequency in Hz	50
Total rated load in kW	2,10-2,40
Length of water inlet hose in m	1,60
Length of water drain hose in m	1,50
Length of supply lead in m	2

WWB360 WCS PWash&8kg
W1 front-loader washing machine:
A -20 %* I 8 kg I 1400 rpm I QuickPowerWash I Miele@home I CapDosing

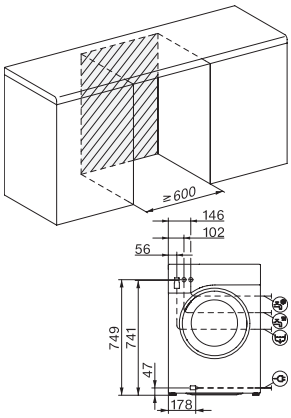

W1 drawing, facia 5 degree, measures in mm

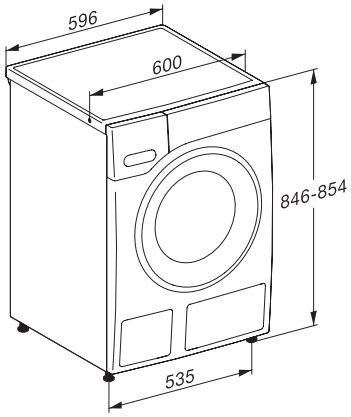

W1 drawing, facia 5 degree, measures in mm

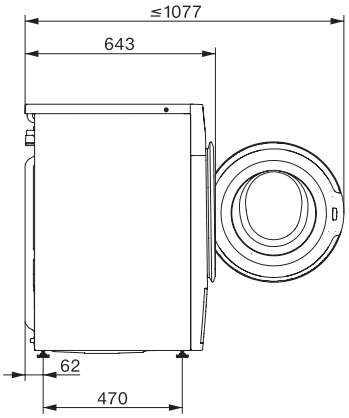

W1 drawing, facia 5 degree, measures in mm

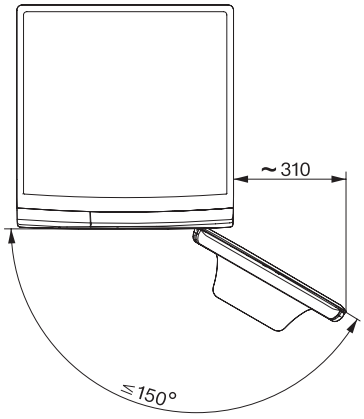

W1 drawing, facia 5 degree, measures in mm