KM 8585-2 FL
Induction hob with onset controls
800 mm | PowerFlex cooking area | M Sense ready



EAN: 4002516971399 / Material number: 12948180 /
Old Material Number: 26185854GB

- 6 cooking zones incl. 3 powerful PowerFlex cooking areas
- Precise settings via 6 MultiSlide sliders including intelligent networking
- Prepared for cooking and frying assistance with M Sense cookware – M Sense ready
- Shortest heat-up times thanks to Booster level
- A width of 800 mm for surface-mounted or flush-fit installation

KM 8585-2 FL
Induction hob with onset controls
800 mm | PowerFlex cooking area | M Sense ready

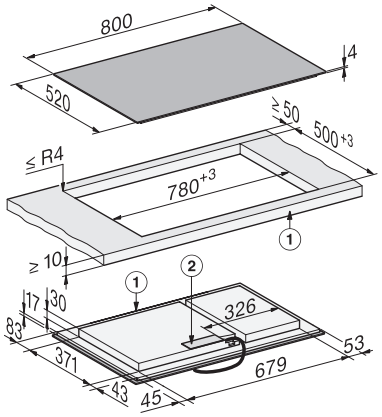

KM8585FL, KM8585FL MattFinish, KM8585-2FL, KM8585-2FL Mattfinish, surface-mounted (*Fußnote) Installation drawing

1) front, 2) Mains connection box, The mains connection cable (L = 1440 mm) is enclosed loose

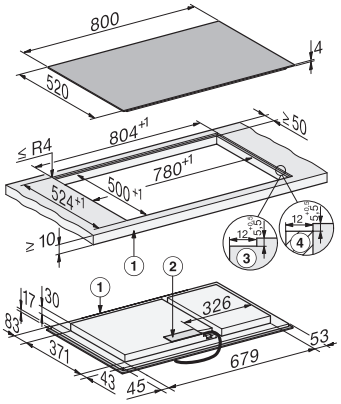

KM8585FL, KM8585FL MattFinish, KM8585-2FL, KM8585-2FL MattFinish, flush (*Fußnote) (Installation drawing)

1) front, 2) Mains connection box, The mains connection cable (L = 1440 mm) is enclosed loosely, 3) Step milling natural stone worktop, 4) Wooden strip 12 mm (no supplied accessories)