DAD 4870 Levantar
Downdraft extractor
800 mm | 450 m3/h | 62.0 dB(a) | Touch | Con@ctivity | DynamicWhite | ECO motor



- Easy recirculation mode installation with plug&play accessory set
- Motorised retractable deflector plate – Hood in Motion
- Control via hob – operate fan and lighting directly from the hob
- DynamicWhite – harmonisation of colour temperature with other light sources
- Efficient filtration- 10-ply stainless-steel grease filter

EAN: 4002516966838 / Material number: 12934690 /
Old Material Number: 28D4870BD

General information	
Model identifier	DAD 4870 Levantar
Manufacturer material number	12934690
EAN number	4002516966838
Marketing class	Gold
Construction type	
Downdraft extractor	•
Construction type and design	
Colour	Obsidian black
Operating modes	
Type of air guide	Can be retrofitted
Recirculation conversion kit (order separately)	DUU 600,DUP 150
Active charcoal filter (order separately)	DKF 30-P, DKF 30-R
Design	
Edge extraction	•
User convenience	
Miele@home	•
Electronic controls	•
Con@ctivity	Personalised
Touch-on-glass controls	•
Power levels (number without Booster level)	3
Run-on time 5/15 min.	•
Booster levels	2
Grease filter saturation indicator	•
Active charcoal filter saturation indicator	•
Motor-operated cooker hoods	•
Easy-to-clean canopy interior – CleanCover	•
Efficiency and sustainability	
Energy efficiency class (A+++ to D)	A
Annual energy consumption in kWh/year	41,1
Fluid dynamic efficiency class	A
Lighting efficiency class	A
Grease filtering efficiency class	B
ECO motor (DC motor)	•
PowerManagement system	•
Filter system	
Number of dishwasher-safe stainless steel grease filters (10-ply)	2
Lighting	
Number x W	1 x 12 W
Light intensity in Lx	400 lx
Colour temperature in K	3500 Kelvin
Dimmer function	•
Fan	
Dual-action blower	•
Exhaust air	
Air throughput in Level 1 (m^3/h) according to EN 61591	205
Air throughput in Level 2 (m^3/h) according to EN 61591	350

DAD 4870 Levantar
Downdraft extractor
800 mm | 450 m3/h | 62.0 dB(a) | Touch | Con@ctivity | DynamicWhite | ECO motor



EAN: 4002516966838 / Material number: 12934690 /
Old Material Number: 28D4870BD

Air throughput in Level 3 (m^3/h) according to EN 61591	450
Air throughput in Booster level 1 (m^3/h) according to EN 61591	610
Air throughput in Booster level 2 (m^3/h) according to EN 61591	655
Sound power in Level 1 (dB(A) re 1 pW) according to EN 60704-3	43,0
Sound power in Level 2 (dB(A) re 1 pW) according to EN 60704-3	55,0
Sound power in Level 3 (dB(A) re 1 pW) according to EN 60704-3	62,0
Sound power in Booster level 1 (dB(A) re 1 pW) acc. to EN 60704-3	69,0
Sound power in Booster level 2 (dB(A) re 1 pW) acc. to EN 60704-3	71,0
Sound pressure in Level 1 (dB(A) re 20 µPa) according to EN 60704-2-13	30,0
Sound pressure in Level 2 (dB(A) re 20 µPa) according to EN 60704-2-13	42,0
Sound pressure in Level 3 (dB(A) re 20 µPa) according to EN 60704-2-13	48,0
Sound pressure in Booster level 1 (dB(A) re 20 µPa) acc. to EN 60704-2-13	55,0
Sound pressure in Booster level 2 (dB(A) re 20 µPa) acc. to EN 60704-2-13	57,0
Recirculation	
Air throughput in Level 1 (m^3/h) according to EN 61591	165
Air throughput in Level 2 (m^3/h) according to EN 61591	320
Air throughput in Level 3 (m^3/h) according to EN 61591	420
Air throughput in Booster level 1 (m^3/h) according to EN 61591	525
Air throughput in Booster level 2 (m^3/h) according to EN 61591	560
Sound power in Level 1 (dB(A) re 1 pW) according to EN 60704-3	49,0
Sound power in Level 2 (dB(A) re 1 pW) according to EN 60704-3	63,0
Sound power in Level 3 (dB(A) re 1 pW) according to EN 60704-3	69,0
Sound power in Booster level 1 (dB(A) re 1 pW) acc. to EN 60704-3	74,0
Sound power in Booster level 2 (dB(A) re 1 pW) acc. to EN 60704-3	75,0
Sound pressure in Level 1 (dB(A) re 20 µPa) according to EN 60704-2-13	36,0
Sound pressure in Level 2 (dB(A) re 20 µPa) according to EN 60704-2-13	50,0
Sound pressure in Level 3 (dB(A) re 20 µPa) according to EN 60704-2-13	55,0
Sound pressure in Booster level 1 (dB(A) re 20 µPa) acc. to EN 60704-2-13	61,0
Sound pressure in Booster level 2 (dB(A) re 20 µPa) acc. to EN 60704-2-13	62,0

DAD 4870 Levantar
Downdraft extractor
800 mm | 450 m3/h | 62.0 dB(a) | Touch | Con@ctivity | DynamicWhite | ECO motor



EAN: 4002516966838 / Material number: 12934690 /
Old Material Number: 28D4870BD

Safety	
Safety switch-off	•
Single-ply safety glass (ESG)	•
Technical data	
Canopy width in mm	800
Overall height for vented and external in in. (mm)	1008
Overall height for extraction mode and external mode cooker hoods in mm	1288
Canopy height in mm	708
Overall height for recirculation in in. (mm)	1008
Canopy depth in mm	171
Overall height for recirculation mode cooker hoods in mm	1288
Cut-out dimension in mm (width) with surface-mounted installation	790
Cut-out dimension in mm (depth) with surface-mounted installation	106
Cut-out dimension in mm (width) with flush-fit installation – internal	790
Cut-out dimension in mm (depth) with flush-fit installation – internal	106
Cut-out dimension in mm (width) with flush-fit installation – external	804
Cut-out dimension in mm (depth) with flush-fit installation – external	124
Net weight in kg	34,0
Length of supply lead in m	1,3
Standard plug fitted	•
Installation on unit floor	Yes
Installation on floor	Yes
Min. base unit width in mm	900
Glass frame width in mm	800
Number of phases	1
Total rated load in kW	0,25
Voltage in V	230
Fuse rating in A	10
Frequency in Hz	50
Installation notes	
Bottom exhaust duct	•
Diameter of exhaust duct in mm	150
Optimum combination with hob subject to availability	KM 8482 FL, KM 8484 FL, KM 8585 FL
Joint installation with hob in one cut-out	Yes
Flush-fit installation	Yes
Surface-mounted installation	Yes

DAD 4870 Levantar
Downdraft extractor
800 mm | 450 m3/h | 62.0 dB(a) | Touch | Con@ctivity | DynamicWhite | ECO motor

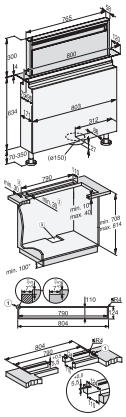

DAD4870, DAD6880, Installation drawings

1. Stepped cutout for flush-fit installation in stone worktops (granite, marble)., 2. Ensure that materials are sufficiently stable., 3. Cut-out off-centre., Exhaust duct Ø 150 mm., *Only required when flat ducting is laid under cabinets or the DUU 600 recirculation box is used.

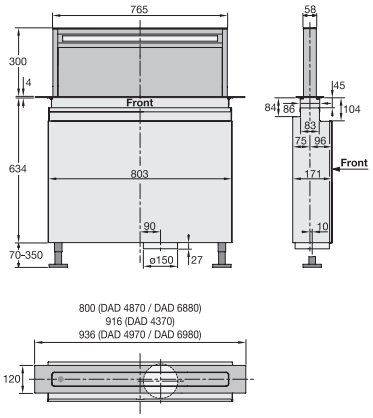

DAD4370, DAD4870, DAD4970, DAD6880, DAD6980, Installation drawings

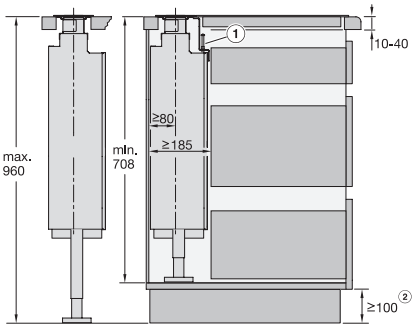

DAD4370, DAD4870, DAD4970, DAD6880, DAD6980, Installation drawings

1. If you install the extractor hood and hob flush with each other in a shared cut-out, you must use the angle strip provided., 2. The minimum dimension is required if flat ducts are installed under the cabinets or if the DUU 600 recirculation box is used.

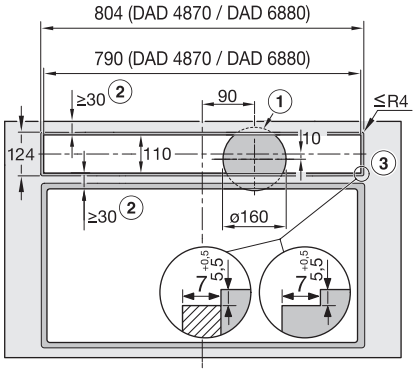

DAD4870, DAD6880, flush, Installation drawings

Installation of the downdraft hood and cooktop in separate cutouts., Flush installation., 1. Cut-out for exhaust air duct in the cabinet base., 2. Ensure sufficient stability of the worktop., 3. Step milling for flush mounting in a countertop. Note the, the different milling widths for the hob and the downdraft. Instead of a step milling, a wooden strip offset 5.5 mm downwards can be installed as an alternative (not included in the scope of delivery)., , Exhaust air connection ø 150 mm.

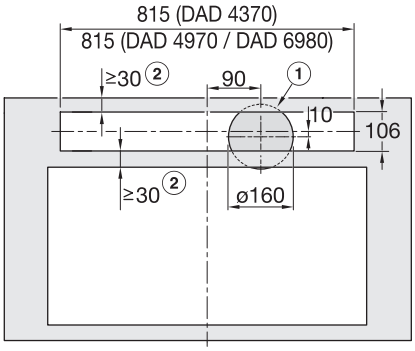

DAD4370, DAD4970, DAD6980, overlying, Installation drawings

Installation of the downdraft hood and cooktop in separate cutouts., Surface-mounted installation, 1. Cutout for exhaust air line in cabinet base., 2. Ensure sufficient stability of the worktop., Exhaust air connection ø150 mm

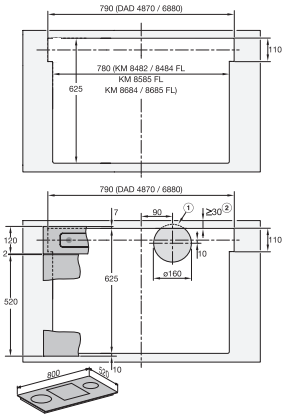

DAD4870, DAD6880, surface mounted installation, common cutout, Installation drawings

Side-by-side installation of the downdraft hood and the cooktop in a common cutout., Example: combination with KM 8684 FL or KM 8685 FL., Surface mounted installation, 1. Cut-out for exhaust air line in cabinet base., 2. Ensure sufficient stability of the worktop., , Exhaust air connection ø 150 mm.

DAD 4870 Levantar
Downdraft extractor
800 mm | 450 m3/h | 62.0 dB(a) | Touch | Con@ctivity | DynamicWhite | ECO motor

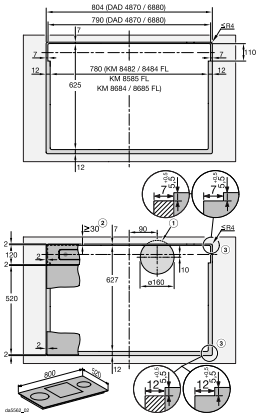

DAD4870, DAD6880, flush, Installation drawings

Side-by-side installation of the downdraft hood and the cooktop in a common cutout., Example: combination with KM 8684 FL or KM 8685 FL., Flush installation, 1. Cut-out for exhaust air duct in the cabinet base., 2. Ensure sufficient stability of the worktop., 3. Step milling for flush mounting in a worktop. Note the, the different milling widths for the hob and the downdraft. , Instead of a step milling, a 5.5 mm downwardly offset wooden strip can be installed (not included in the scope of delivery)., , Exhaust air connection ø 150 mm.