G 7085 SCVi XXL AutoDos
Fully integrated dishwasher XXL
A I 43 dB I Cutlery tray I ExtraComfort baskets I AutoDos I Miele@home



- Tested for the equivalent of 20 years' service life*
- Best energy efficiency class A – energy-saving and eco-friendly
- Convenient, great results and perfect for everyday use – ExtraComfort baskets
- Convenient, efficient, sustainable – perfect results with automatic dispensing from PowerDisk
- More information options and modern domestic appliance networking – Miele@home
- Perfect results in less than one hour – QuickPowerWash

* During the development phase of the G 5000 and G 7000 dishwasher series, Miele tested models and core components in 5600 wash cycles (= 280 wash cycles per year over a period of 20 years) in various programmes. More at: miele.com/20years

EAN: 4002516913764 / Material number: 12865050 /
Old Material Number: 21708562GB

General information	
Model identifier	G 7085 SCVi XXL AutoDos
Manufacturer material number	12865050
EAN number	4002516913764
Marketing class	Gold
Model	
Fully integrated dishwasher	•
60 cm dishwasher	•
XXL dishwasher	•
Design	
Control panel colour	Stainless Steel.
Control panel version	Fully integrated fascia
Control type	Programme selector buttons
Display	1-line text display
Display colour	White
MultiLingua	•
Convenience	
Networking with Miele@home	•
Automatic dispensing with PowerDisk	•
Door closing aid	ComfortClose
Time left display	•
Delay start up to 24 hours	•
In-operation indicator	optical and acoustic
Display language selection	•
Efficiency	
Energy efficiency class (A–G)	A
Water consumption in the Automatic programme in l from	6,0
Water consumption of the ECO programme in litres per programme cycle	8,4
Electricity consumption in the ECO programme in kWh	0,54
Energy consumption of the ECO programme in kWh after 100 programme cycles	54
Consumption value in kWh in the ECO programme with hot water connection	0,29
Duration of ECO programme in minutes	230
Power rating with delay start in W	0,90
Power rating in off mode in W	0,30
Power rating in standby mode in W	0,30
Power rating in networked standby in W	0,90
Number of place settings	14
Noise emission class	B
Noise emissions in dB(A)	43
EcoFeedback	•
EcoPower Technology	•
Proven hygiene	•
Hot water connection	•
Half load	•

G 7085 SCVi XXL AutoDos
Fully integrated dishwasher XXL
A I 43 dB I Cutlery tray I ExtraComfort baskets I AutoDos I Miele@home



EAN: 4002516913764 / Material number: 12865050 /
Old Material Number: 21708562GB

Quality of results	
Fresh water dishwasher	•
AutoOpen drying	•
SensorDry	•
Active condensation drying	•
BrilliantGlassCare	•
Wash programmes	
QuickPowerWash	•
ECO	•
Automatic	•
ComfortWash 45 °C	•
Intensive 75 °C	•
PowerWash	•
ComfortWash+ 55 °C	•
Gentle	•
ExtraQuiet 39 dB(A)	•
Appliance care	•
Rinse out salt	•
Dishwashing options	
AutoDos	•
BottleClean	•
Quick	•
IntenseZone	•
Extra Clean	•
Extra dry	•
Basket design	
Cutlery loading	3D MultiFlex tray
FlexCare glass holder	2
FlexCare cup rack	1
Basket design	ExtraComfort
MultiClip	•
FlexCare Glass & Bottle	•
XL Assist	•
Safety	
Waterproof system	•
Filter indicator light	•
Technical data	
Niche width minimal in mm	600
Niche width max in mm	600
Niche height minimal in mm	845
Niche height maximal in mm	910
Niche depth in mm	550
Appliance width in mm	598
Appliance height in mm	845
Appliance depth in mm	550
Depth with door open in cm	120,5
Net weight in kg	48,0
Total rated load in kW	2,00

G 7085 SCVi XXL AutoDos
Fully integrated dishwasher XXL
A I 43 dB I Cutlery tray I ExtraComfort baskets I AutoDos I Miele@home



EAN: 4002516913764 / Material number: 12865050 /
Old Material Number: 21708562GB

Voltage in V	230
Fuse rating in A	10
Number of phases	1
Electrical frequency standard	50
Length of water inlet hose in m	1,50
Length of water drain hose in m	1,50
Length of supply lead in m	1,80
Min. front panel weight in kg	4,0
Max. front panel weight in kg	12,0
Accessories included	
1 x PowerDisk	•
Voucher for 6 x PowerDisk	•
Available display languages	
Available display languages via MultiLingua	□□□□□□□, deutsch, english, english (AU), □□□, □□□

G 7085 SCVi XXL AutoDos
Fully integrated dishwasher XXL
A I 43 dB I Cutlery tray I ExtraComfort baskets I AutoDos I Miele@home

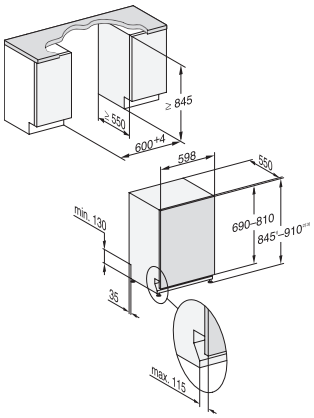

G7000, fully integrated dishwasher, XXL, 60cm (installation drawing)

1) Plinth height 35-155 mm, 2) Plinth height 100-220 mm, 3) Appliance height max. 970 mm with plinth height conversion kit (Mat.-Nr. 6.394.761),