EVS 7010

Handleless built-in vacuum drawer, 14 cm high for professional vacuum packing of food.



- Remains fresh for longer – storage and portioning of food
- Intense taste – marinading food
- Preparation of food for sous-vide cooking
- Easy handling – Touch controls and fully telescopic runners
- Opening the drawer couldn't be easier – Push2open

EAN: 4002516835257 / Material number: 12641390 /
Old Material Number: 30701061GB

General information	
Model identifier	EVS 7010
Manufacturer material number	12641390
EAN number	4002516835257
Construction type and design	
VitroLine	•
ArtLine	•
Handleless	•
Construction type and design	
Built-in vacuum sealing drawer	•
Colour	Pearl beige
Operating modes	
Vacuum sealing	•
Convenience features	
Marinating food	•
Convenience features	
Food can be stored for longer	•
Preparing food for sous-vide cooking	•
Range of applications	
Vacuum sealing food	•
Vacuum sealing liquids	•
Vacuum sealing containers	•
Marinating food	•
Dividing food into portions	•
Resealing original packaging	•
Sealing jars	•
User convenience	
Control panel with sensor controls	•
Fully telescopic runners for easy loading and unloading of the warming drawer	•
Control panel with symbols	•
Push2open mechanism	•
Vacuuming strength min. in steps	1
Max. vacuum settings	3
LED vacuum setting indicator	•
Vacuuming strength min. for external containers in steps	1
Max. vacuum settings for external containers	3
LED vacuum setting indicator	•
LED sealing duration indicator	•
Sealing duration settings	1 - 3
Stop function	•
Vacuum-sealing technology	
Stainless-steel vacuum chamber	•
Cleaning and care	
Flush control panel	•
Note regarding moisture removal from the vacuum pump	•
Replaceable sealing bar	•

EVS 7010

Handleless built-in vacuum drawer, 14 cm high
for professional vacuum packing of food.



EAN: 4002516835257 / Material number: 12641390 /
Old Material Number: 30701061GB

Safety	
Safety switch-off	•
Technical data	
Appliance width in mm	595
Appliance height in mm	141
Appliance depth in mm	570
Useable interior height in mm	80
Total rated load in kW	0,32
Voltage in V	230
Frequency in Hz	50-60
Fuse rating in A	10
Number of phases	1
Mains cable with plug	•
Length of supply lead in m	1,8
User convenience	
Stainless steel vacuum sealing chamber capacity in l	8,0
Minimum bag size in mm	250
Maximum bag size in mm	350
Vacuum-sealing technology	
Pump capacity in m^3/h	4
Accessories included	
Adapter for vacuum-sealing container	1
Vacuum sealing bag support	1
Vacuum sealing bags	•
Number of vacuum sealing bags 180 x 280 mm	50
Number of vacuum sealing bags 240 x 350 mm	50

Miele

EVS 7010

Handleless built-in vacuum drawer, 14 cm high for professional vacuum packing of food.

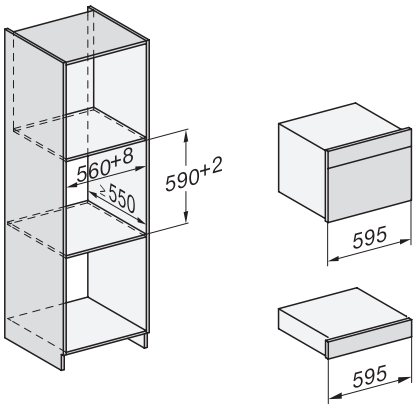

Installation_DG_DGM_DGC_XL_ESW7x10_EVS7010, installation drawings

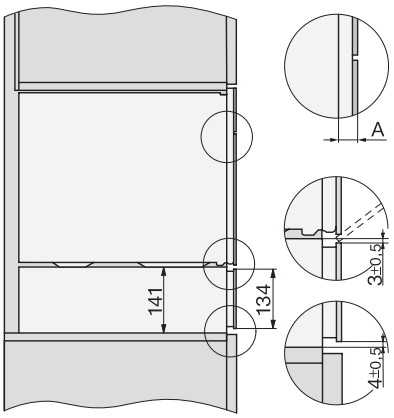

Side view_DG_DGM_ESW7x10_EVS7010 installation drawings

A) 22 mm glass, 23,3 mm stainless steel

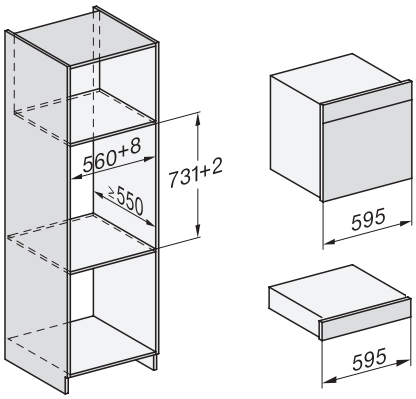

Installation_DGC_XXL_ESW7x10_EVS7010 installation drawings

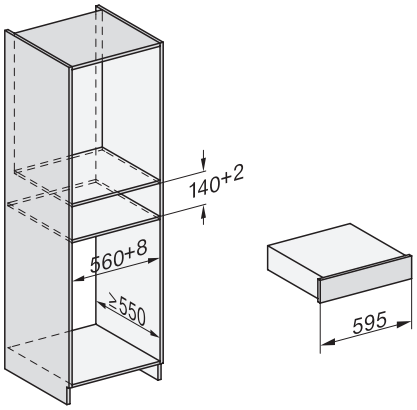

built-in ESW7x10 EVS7010, installation drawing

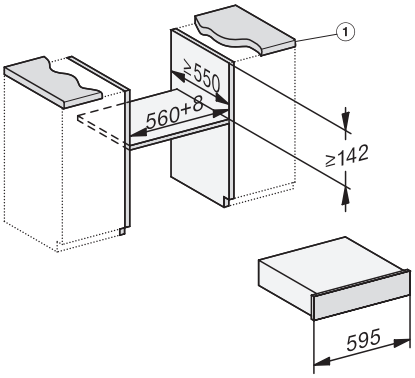

built-in EVS 7010 build-under, installation drawing

1) Countertop overhang ≤ 29mm

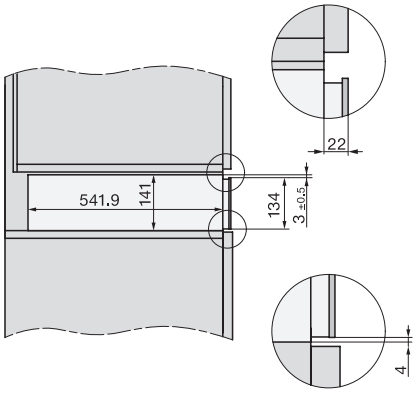

side view ESW7x10 EVS7010, installation drawing, GB, AU

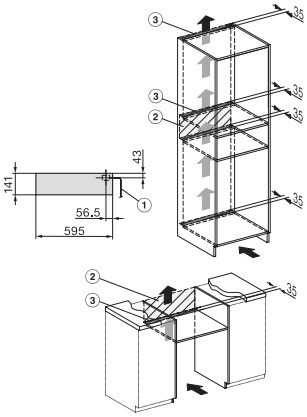

installation EVS7010 installation drawing, GB, AU

1) Mains connection cable, L=2000 mm, 2) No connection in this area, 3) Ventilation cutout min. 180 cm²