KM 3054-1
Gas hob
with electronic functions for maximum safety and user convenience.



- Optimal – single-handed operation via rotary dials and QuickStart
- Elegant design – 942 mm wide gas hob on glass for surface-mounted installation
- Particularly versatile – 5 burners incl. 1 dual wok
- Extremely safe – GasStop&Restart function
- Easy cleaning – dishwasher-safe ComfortClean pot rests

EAN: 4002516127611 / Material number: 10939040 / Old Material Number: 26305451I

General information	
Model identifier	KM 3054-1
Manufacturer material number	10939040
EAN number	4002516127611
Marketing class	Platinum
Heating type	
Heating type	Gas
Construction type	
Independent of cooker	•
Design	
Elegant glass ceramic surface	•
Cast iron pot rests (matt black enamelled)	•
Cooking zone details	
Number of cooking zones	5
Gas burner power rating	
Small burner in kW	1,00
Medium burner in kW	1,70
Large burner in kW	2,70
Dual wok burner in kW	4,70
1st cooking zone/cooking area	
Position	left centre
Type	Dual wok burner
2nd cooking zone/cooking area	
Position	rear centre
Type	Economy burner
3rd cooking zone/cooking area	
Position	rear right
Type	Standard burner
4th cooking zone/cooking area	
Position	front right
Type	Standard burner
5th cooking zone/cooking area	
Position	front centre
Type	High-speed burner
User convenience	
Operation via knobs	•
Electronic ignition with single-hand operation	•
QuickStart	•
Cleaning and care	
Easy to clean ceramic glass	•
Dishwasher-proof pot rests	•
Safety	
Heat indicator	•
Operational indicator	•
GasStop & ReStart	•
Technical data	
Dimensions (H x W x D) in mm	53 x 942 x 526
Dimensions in mm (width)	942

KM 3054-1
Gas hob
with electronic functions for maximum safety and user convenience.



EAN: 4002516127611 / Material number: 10939040 / Old Material Number: 26305451I

Dimensions in mm (height)	53
Dimensions in mm (depth)	526
Casing height incl. connection box in mm	78
Cutout dimensions in mm (width) with surface-mounted installation	916 mm
Cutout dimensions in mm (depth) with surface-mounted installation	500 mm
Weight in kg	22
Length of supply lead in m	2,0
Position of gas connection	Hinten rechts
Voltage in V	220-240
Frequency in Hz	50-60
Accessories included	
Mains cable	Yes
Wok ring	•
Small trivet	•

KM 3054-1
Gas hob
with electronic functions for maximum safety and user convenience.

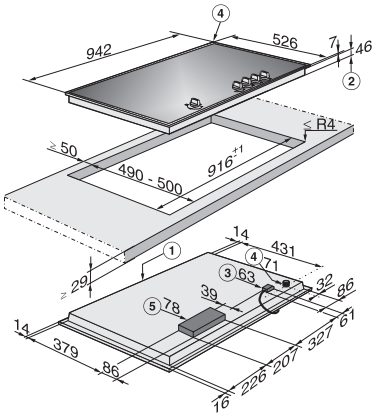

KM 3054-1 G (installation drawing)

1. Front, 2. Casing depth, 3. Mains connection box with mains connection cable L = 2000 mmm, 4. Gas connection R 1/2" – ISO 7-1 (DIN EN 10226)