KFNS 7734 D

Built-in fridge-freezer, 178 cm niche height

DynaCool, convenient LED lighting and NoFrost for optimum storage.



- Spacious drawer with moisture control – DailyFresh
- Optimum and maintenance-free LED lighting in compartment
- No icing up of food and no need to defrost thanks to NoFrost
- Uniform temperature distribution inside the appliance – DynaCool
- No visible build-up of condensation thanks to dry back wall

EAN: 4002516737971 / Material number: 12426100 /
Old Material Number: 38773406AUS

General information	
Model identifier	KFNS 7734 D
Manufacturer material number	12426100
EAN number	4002516737971
Marketing class	Gold
Appliance category	
Fridge-freezer	•
Construction type	
Built-in appliance	•
Integrated appliance	•
Door hinge	right
Convertible door hinging	•
Side-by-side enabled	•
User convenience	
Fridge zone lighting	LED
Networking with Miele@home	•
Freshness system	DailyFresh
ComfortClean	•
ComfortSize	•
DynaCool	•
Party mode	•
Holiday mode	•
NoFrost	•
DuplexCool	•
VarioRoom	•
Ice/Water dispenser with mains water connection	No
Control system	
Operating concept	SensorTouch
Fridge compartment can be switched off	Yes
Independent temperature regulation of fridge and freezer zones	Yes
SuperCool	•
SuperFreeze	•
No. of temperature zones	2
Sabbath mode	•
Fridge/Fridge section	
No. of shelves	4
Chrome-plated metal bottle rack	•
No. of crisper drawers	1
Number of inner door racks for tinned food	2
Door rack for bottles	1
Door shelves	3
Freezer/Freezer section	
Number of freezer drawers	3
Safety	
Lock function	•
Acoustic door alarm	•
Acoustic temperature alarm	•

KFNS 7734 D
Built-in fridge-freezer, 178 cm niche height
DynaCool, convenient LED lighting and NoFrost for optimum storage.



EAN: 4002516737971 / Material number: 12426100 /
Old Material Number: 38773406AUS

Optical door alarm	•
Optical temperature alarm	•
Power cut indication for freezer section	•
Technical data	
Niche width in mm min.	560
Niche width in mm max.	570
Niche height in mm min.	1772
Niche height in mm max.	1788
Niche depth in mm	550
Appliance width in mm	559
Appliance height in mm	1770
Appliance depth in mm	546
Weight in kg	68,3
Door hinge technology	Fixed door
Climate range	SN-T
Refrigerator compartment in l	183
4* freezer compartment in l	70
Total usable capacity in l	253
Sound emissions in dB(A) re 1 pW	34
Current consumption (mA)	1400
Voltage in V	220-240
Fuse rating in A	10
Number of phases	1
Frequency in Hz	50-60
Length of supply lead in m	2,2
Replacing lamps	Service
Accessories included	
Egg tray	•
Water filter	Nein
Ice cube tray	•

KFNS 7734 D

Built-in fridge-freezer, 178 cm niche height

DynaCool, convenient LED lighting and NoFrost for optimum storage.

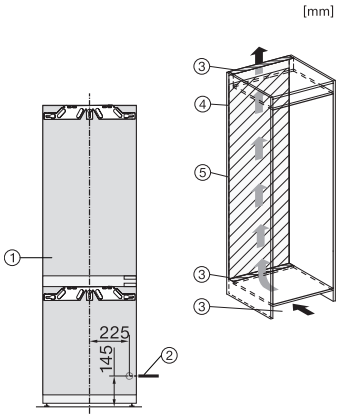

KFN7734C, KFN7734F, KFN7734D, KFN7764D, KFN7785D, KFN7744E, KFN7774B, installation

1. View from the front, 2. Mains connection cable, L = 2200 mm, 3.Ventilation cut-out min. 200 cm², 4. Ventilation, 5. No connections permitted in this area

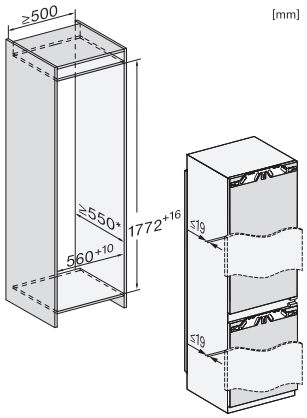

KFN7734C, KFN7734F, KFN7734D, KFN7764D, KFN7785D, KFN7744E, KFN7774B, built-in

*The declared energy consumption was calculated in a 560 mm deep niche. The appliance is fully functional in a 550 mm niche but the energy consumption will be slightly higher.

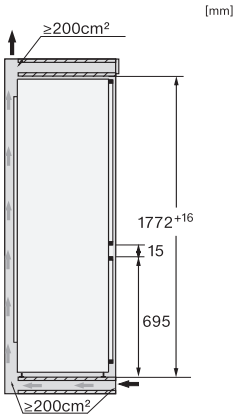

KFNS7734D, KFN7734C, KFN7734F, KFN7734D, KFN7764D, KFN7785D, KFN7744E, KFN7774B, side view