FNS 7740 F

Built-in freezer, 178 cm niche height
with Frost free and eight freezer drawers for maximum convenience.



- No icing up of food and no need to defrost thanks to NoFrost
- Food is frozen quickly and gently – SuperFreeze
- Flexible increase in freezer volume – VarioRoom

EAN: 4002516420934 / Material number: 11738280 /
Old Material Number: 37774000AUS

General information	
Model identifier	FNS 7740 F
Manufacturer material number	11738280
EAN number	4002516420934
Marketing class	Gold
Appliance category	
Freezer	•
Construction type	
Built-in appliance	•
Integrated appliance	•
Door hinge	Left
Convertible door hinging	•
Side-by-side enabled	•
User convenience	
Networking with Miele@home	•
Party mode	•
NoFrost	•
VarioRoom	•
Control system	
Operating concept	SensorTouch
SuperFreeze	•
No. of temperature zones	1
Sabbath mode	•
Freezer/Freezer section	
Number of freezer drawers	8
Safety	
Lock function	•
Acoustic door alarm	•
Acoustic temperature alarm	•
Optical door alarm	•
Optical temperature alarm	•
Power cut indication for freezer section	•
Technical data	
Niche width in mm min.	560
Niche width in mm max.	570
Niche height in mm min.	1772
Niche height in mm max.	1788
Niche depth in mm	550
Appliance width in mm	559
Appliance height in mm	1770
Appliance depth in mm	544
Weight in kg	63,5
Door hinge technology	Fixed door
Max. door front weight – refrigerator, in kg	26
Climate range	SN-T
4* freezer compartment in l	213
Total usable capacity in l	213
Storage time in case of fault in h	10

FNS 7740 F

Built-in freezer, 178 cm niche height

with Frost free and eight freezer drawers for maximum convenience.



EAN: 4002516420934 / Material number: 11738280 /
Old Material Number: 37774000AUS

Current consumption (mA)	1300
Voltage in V	220-240
Fuse rating in A	10
Number of phases	1
Frequency in Hz	50-60
Length of supply lead in m	2,2
Replacing lamps	Service
Accessories included	
Water filter	Nein
Ice cube tray	•

FNS 7740 F

Built-in freezer, 178 cm niche height
with Frost free and eight freezer drawers for maximum convenience.

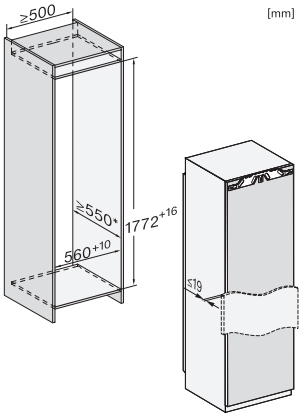

K7733E, K7763E, K7732D, K7732E, K7734F, K7764E, K7743E, K7744E, K7773D, K7774D, built-in

*The declared energy consumption was calculated in a 560 mm deep niche. The appliance is fully functional in a 550 mm niche but the energy consumption will be slightly higher.

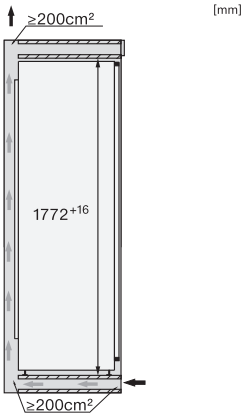

K7733E, K7763E, K7732E, K7734F, K7764E, K7743E, K7744E, K7773D, K7774D, side view