H 7860 BPX
Handleless oven
seamless design with food probe and BrilliantLight.



- Large touch display with movement sensor – M Touch + MotionReact
- An eye on what's cooking anywhere, any time – camera in the oven
- Minimal cleaning effort – Pyrolytic cleaning equipment& PyroFit
- Especially light dough and nicely browned crusts – Moisture plus
- Ensures your food won't overcook – TasteControl

EAN: 4002516837299 / Material number: 12640870 /
Old Material Number: 22786095GB

General information	
Model identifier	H 7860 BPX
Manufacturer material number	12640870
EAN number	4002516837299
Marketing class	Diamond
Construction type and design	
ArtLine	•
Handleless	•
Construction type and design	
Built-in oven	•
Colour	Pearl beige
Convenience features	
TasteControl	•
Rapid heat-up	•
Pre-heating	•
Food probe	Without cable
Keeping warm	•
Crisp function	•
Operating modes	
Defrosting	•
Auto roast	•
Economy grill	•
Moisture plus with Auto roast	•
Fan plus	•
Moisture plus with Fan plus	•
Intensive bake	•
Moisture plus with Intensive bake	•
Moisture plus	•
Moisture plus with Conventional heat	•
Low temperature cooking	•
Conventional heat	•
Top heat	•
Bottom heat	•
Fan grill	•
Special applications	•
Grill	•
Eco hot air	•
Automatic programmes	•
Country-specific automatic programmes	•
User convenience	
Networking with Miele@home	•
Display	M Touch
FoodView	•
SoftOpen	•
Touch2Open	•
MultiLingua	•
MyMiele	•
Help function	•

H 7860 BPX
Handleless oven
seamless design with food probe and BrilliantLight.



EAN: 4002516837299 / Material number: 12640870 /
Old Material Number: 22786095GB

Programmable timed steam injection	•
Polyphonic buzzers	•
Time of day display	•
Date display	•
Minute minder	•
Programmable start of cooking duration	•
Programmable cooking duration	•
Actual temperature display	•
Recommended temperature	•
User programmes	•
Individual settings	•
Efficiency	
Energy efficiency class (A+++ – D)	A+
Automatic residual heat utilisation	•
Power rating in off mode in W	0,3
Power rating in standby mode in W	0,8
Power rating in networked standby in W	2,0
Time until automatic switch to standby in min	20
Time until automatic switch to networked standby in min	20
Time until automatic switch to off mode in min	20
Cleaning and care	
Pyrolytic self-cleaning	•
Catalyser	•
Hinged grill element	•
CleanGlass door	•
Steam techn./water supply	
Steam generator power in kW	1,10
Fresh water container volume in l	0,3
Suction tube for drawing in water	•
Safety	
Appliance cooling system and touch-cool front	•
Safety switch-off	•
System lock	•
Door lock during pyrolytic cleaning	•
Sensor lock	•
Technical data	
Oven compartment volume in l	76
No. of shelf levels	5
Numbered shelf levels	•
Oven light	BrilliantLight
Plug type	3 pole without plug
Niche width min. in mm	560
Niche width max. in mm	568
Niche height min. in mm	590
Niche height max. in mm	595
Niche depth in mm	550
Weight in kg	47,0
Total rated load in kW	3,70

H 7860 BPX
Handleless oven
seamless design with food probe and BrilliantLight.



EAN: 4002516837299 / Material number: 12640870 /
Old Material Number: 22786095GB

Length of supply lead in m	1,50
Voltage in V	220-240
Frequency in Hz	50
Fuse rating in A	16
Number of phases	1
Replacing lamps	Service
Accessories included	
Baking tray with PerfectClean HBB 71	1
Universal tray with PerfectClean HUBB 71	1
Baking and roasting rack PyroFit	1
PyroFit FlexiClip runners	1
Wireless food probe	1
Removable PyroFit side runners (pair)	1
Grilling and roasting insert with PerfectClean	1
Descaling tablets	2
Available display languages	
Available display languages via MultiLingua	□□□□□□□, □□, □□□□, deutsch, dansk, english, suomi, français, ελληνικά, italiano, □□□, □□□, hrvatski, bahasa malaysia, nederlands, norsk, polski, português, română, русский, svenska, srpski, slovenčina, slovenščina, español, čeština, türkçe, українська, magyar

H 7860 BPX
Handleless oven
seamless design with food probe and BrilliantLight.

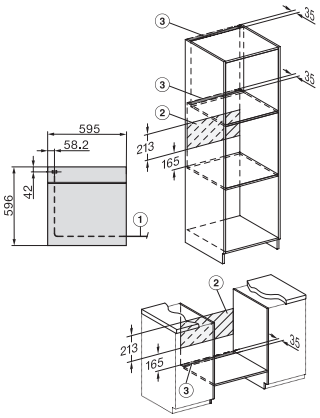

installation H7000 XL, installation drawing, GB, AU

1) Netzanschlussleitung, L=1500 mm, 2) In diesem Bereich kein Anschluss, 3) Lüftungsausschnitt min. 150 cm²

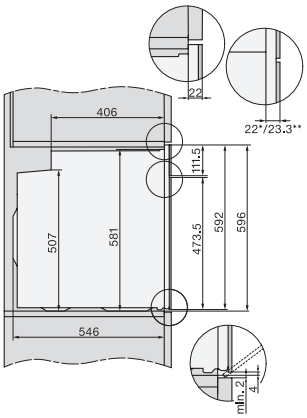

side view H7000 XL, installation drawings, GB, AU

22 mm – glass, 23.3 mm – metal

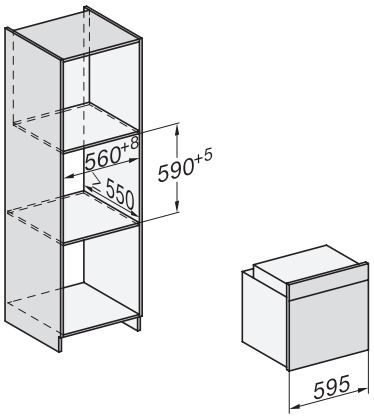

built-in H7000 XL, installation drawing

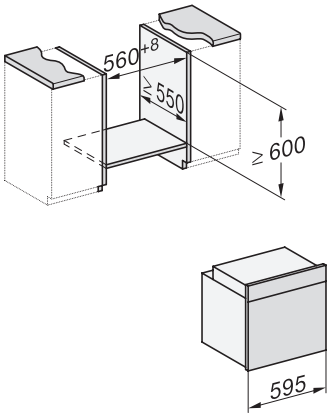

Installation H7000 XL underframe, installation drawings

If the oven is to be installed under a hob, follow the instructions for installing the hob and the height of the hob.

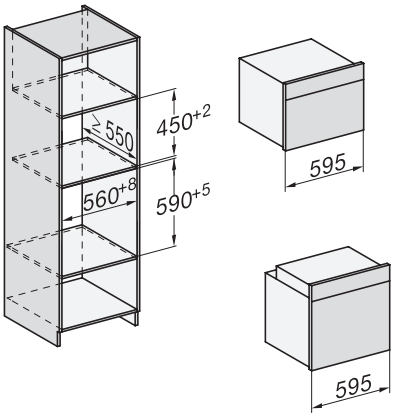

Installation H7000 BM XL, installation drawings

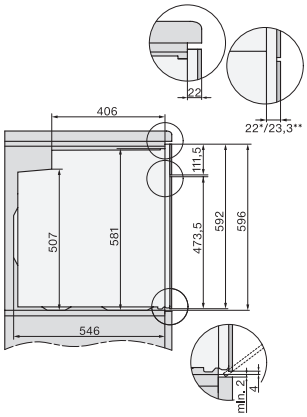

side view H7000 XL build-under, installation drawing

22 mm – glass, 23,3 mm – metal

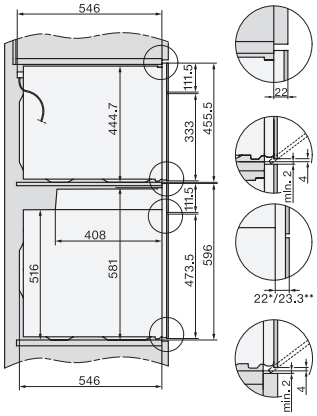

Side view Kombi BM XL, installation drawings

22 mm – glass, 23,3 mm – metal

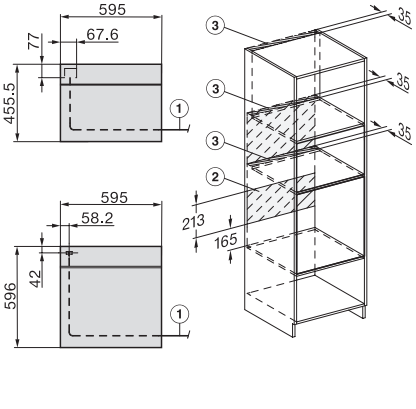

Installation Kombi BM XL, installation drawings

22 mm – glass, 23,3 mm – metal