WER865 WPS PWash&TDos&9kg
W1 front-loader washing machine:
A I 9 kg I 1600 rpm I M Touch I Automatic dispensing I QuickPowerWash



- Tested for 20 years of perfect laundry care*
- Save energy in the best energy efficiency class (A)
- M Touch – simple control by tapping or swiping
- Precise and automatic detergent dispensing with TwinDos®**
- QuickPowerWash ensures fast, efficient results in just 49 minutes***

* During the development phase of the W1 / W2 washing machine series, Miele tested models and core components in 5000 wash loads (= 5 wash loads per week for 50 weeks per year) in various programmes. More: miele.com/20years

** Patent EP 2 784 205

*** This applies to all Miele washing machines that enable the process and machine-related parameters presented in the summary of the WL 1110/18 test report to be implemented.

EAN: 4002516257943 / Material number: 11359360 /
Old Material Number: 11ER8656GB

General information	
Model identifier	WER865 WPS PWash&TDos&9kg
Manufacturer material number	11359360
EAN number	4002516257943
Marketing class	Diamond
Construction type	
Suitable for stacking	•
Door hinging	right
Side-by-side	•
Slot-in	•
Can be built-under	•
Model	
Product brand	W1 Chrome Edition
Front-loader	•
Spinning	
Max. spin speed	1600
Rinse hold	•
Without spin function	•
Design	
Appliance colour	Lotus white
Control panel colour	Lotus white
Door design	Chrome
Control panel version	Straight
Control type	Touch control
Display	MTouch
Cleaning performance	
Innovative PowerWash technology	•
TwinDos automatic detergent dispensing	•
CapDosing portioned dispensing	•
Stains option	•
Certified virus hygiene	•
Gentle laundry care	
Honeycomb drum	•
Load in kg	9
User convenience	
Networking with Miele@home	•
Delay start up to 24 hours	•
Time left display	•
Time of day display	•
Programme sequence indicator	•
Washing assistant	•
Information text	•
Favourite programmes	•
Drum lighting	LED
MultiLingua	•
AutoClean detergent drawer	•
AddLoad	•

Miele

WER865 WPS PWash&TDos&9kg
W1 front-loader washing machine:
A I 9 kg I 1600 rpm I M Touch I Automatic dispensing I QuickPowerWash



EAN: 4002516257943 / Material number: 11359360 /
Old Material Number: 11ER8656GB

Efficiency	
Energy efficiency class (A–G)	A
Weighted energy consumption per 100 operating cycles for the wash cycle in kWh	49
Weighted water consumption per cycle in l	48
Spin efficiency class (A–G)	A
Acoustic airborne noise emission class (spin cycle; A–D)	A
Sound emissions during spin cycle in dB(A) re 1 pW	68
Duration of the “ECO 40–60” programme at nominal capacity	199
Power rating in off mode in W	0,30
Power rating in networked standby in W	0,70
EcoFeedback	•
Low temperature wash "Cold" and "20 °C"	•
Automatic load control	•
Flow meter	•
Foam sensing	•
ProfiEco motor	•
Wash programmes	
QuickPowerWash	•
Automatic plus	•
Cottons (coloureds)	•
Minimum iron	•
Delicates	•
Shirts	•
Silk (hand-washable)	•
Woollens (hand-washable)	•
Express 20	•
Dark garments	•
Denim	•
Outerwear	•
Proofing	•
Sportswear	•
Trainers	•
Down duvets	•
Pillows	•
Down	•
Curtains	•
Cottons hygiene	•
Clean machine	•
Cottons arrow	•
First wash	•
Separate rinse	•
Starch	•
Drain / Spin	•
ECO 40-60	•
Washing extras	
SingleWash	•
Short	•

Miele

WER865 WPS PWash&TDos&9kg
W1 front-loader washing machine:
A I 9 kg I 1600 rpm I M Touch I Automatic dispensing I QuickPowerWash



EAN: 4002516257943 / Material number: 11359360 /
Old Material Number: 11ER8656GB

Soak	•
Pre-wash	•
Water plus	•
Additional rinse cycle	•
Extra quiet	•
Pre-ironing with steam	•
Buzzer	•
AllergoWash	•
Safety	
Water protection system	Waterproof-System
Safety lock	•
PIN-Code	•
Optical interface	•
Technical data	
Dimensions (H x W x D) in mm	850 x 596 x 636
Dimensions in mm (width)	596
Dimensions in mm (height)	850
Dimensions in mm (depth)	636
Appliance depth in mm with opened door	1054
Appliance depth w/o door in mm	600
Weight in kg	95
Voltage in V	220-240
Fuse rating in A	13
Frequency in Hz	50
Total rated load in kW	2,10-2,40
Length of water inlet hose in m	1,60
Length of water drain hose in m	1,50
Length of supply lead in m	2
Replacing lamps	Service
Accessories included	
3 Caps	•
UltraPhase 1 + 2	•
Voucher for 5 Miele UltraPhase cartridges	•
Available display languages	
Available display languages via MultiLingua	?????????, ??, ?????, deutsch, dansk, english (AU), english (CA), english (GB), english (US), suomi, français (CA), français (FR), ελληνικά, italiano, ???, ???, hrvatski, bahasa malaysia, nederlands, norsk, polski, português, română, русский, svenska, srpski, slovenčina, slovenščina, español, čeština, türkçe, українська, magyar

WER865 WPS PWash&TDos&9kg
W1 front-loader washing machine:
A I 9 kg I 1600 rpm I M Touch I Automatic dispensing I QuickPowerWash

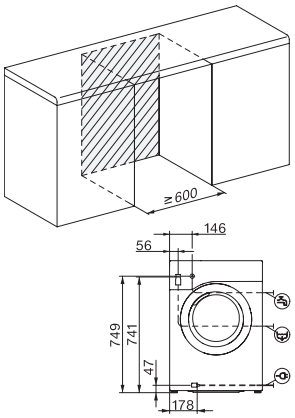

W1 installation drawing, slanted facia or straight facia, measures in mm

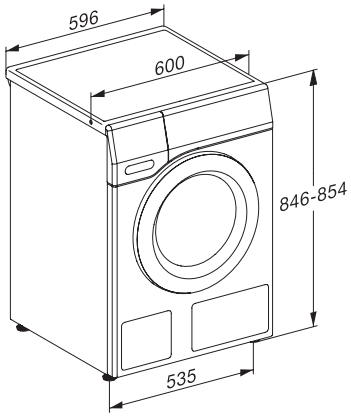

W1 drawing, slanted facia or straight facia, measures in mm

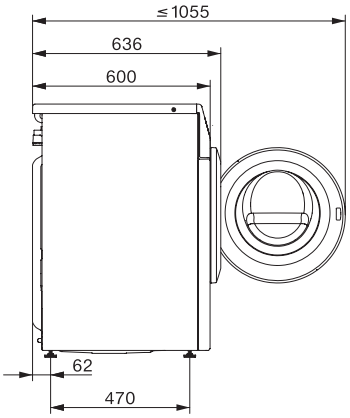

W1 drawing, slanted facia or straight facia, measures in mm

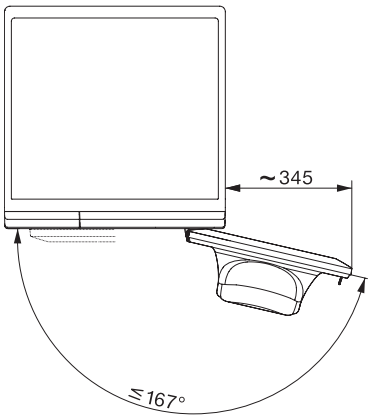

W1 drawing, slanted facia or straight facia, measures in mm