KM 8482 FR
Induction hob with onset controls
806 mm | Individual cooking zones and PowerFlex XL cooking area



EAN: 4002516951124 / Material number: 12911400 / Old Material Number: 26184820D

- 4 cooking zones incl. 1 powerful PowerFlex XL cooking area
- Precise settings via SingleSlide central slider incl. networking
- Shortest heat-up times thanks to Booster level
- A width of 806 mm with stainless steel frame for surface installation

KM 8482 FR

Induction hob with onset controls

806 mm | Individual cooking zones and PowerFlex XL cooking area

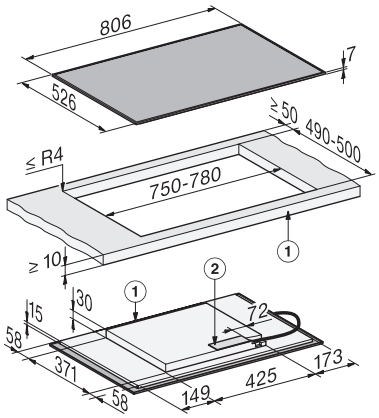

KM8482FR surface-mounted (*Fußnote) Installation drawing

1) front, 2) Mains connection box, The mains connection cable (L = 1440 mm) is enclosed loose