KMDA 7272-1 FR Silence
Induction hob with integrated vapour extraction
806 mm | Extraction and recirculation | SilenceMotor | Individual cooking zones



- The quietest TwoInOne from Miele – Silence motor
- Ample space – 4 round cooking zones
- Automatic fan power regulation – Con@ctivity
- Compact control using the numerical display – ComfortSelect Plus
- Flexible installation – Plug & Play, ducted recirculation or vented system

EAN: 4002516974673 / Material number: 12968740 /
Old Material Number: 26727276GB

General information	
Model identifier	KMDA 7272-1 FR Silence
Manufacturer material number	12968740
EAN number	4002516974673
Marketing class	Silver
Construction type	
Induction hob with integrated vapour extraction	•
Operating modes	
Exhaust air guided with optional accessories	DFK-xxxx,DMK 150-1
Recirculation air guided with optional accessories	DFK-xxxx,DUU 1500,DUU 600
Unguided recirculation air (Plug&Play installation)	•
Design	
Elegant glass ceramic surface	•
Frameless – surface-mounted	•
Ceramic surface colour	Black
Stainless-steel frame	•
Flush fit extractor	•
Colour of cover grille	Black
Cooking zone details	
Number of cooking zones	4
Maximum number of pans	4
1st cooking zone/cooking area	
Position	front left
Type	Dual-circuit ring
Size in mm	Ø 110-220
Max. rating in W	2300
Max. Booster power rating in W	3000
2nd cooking zone/cooking area	
Position	rear left
Type	Dual-circuit ring
Size in mm	Ø 100-190
Max. rating in W	1400
Max. Booster power rating in W	2100
3rd cooking zone/cooking area	
Position	rear right
Type	Dual-circuit ring
Size in mm	Ø 110-220
Max. rating in W	2300
Max. Booster power rating in W	3000
4th cooking zone/cooking area	
Position	front right
Type	Dual-circuit ring
Size in mm	Ø 100-190
Max. rating in W	1400
Max. Booster power rating in W	2100
User convenience	
Con@ctivity	•

KMDA 7272-1 FR Silence
Induction hob with integrated vapour extraction
806 mm | Extraction and recirculation | SilenceMotor | Individual cooking zones



EAN: 4002516974673 / Material number: 12968740 /
Old Material Number: 26727276GB

Digital power level display	•
Operation via sensor controls	ComfortSelect Plus
Display colour	Yellow
Permanent pan recognition	•
Run-on time 5/15 min.	•
Active charcoal filter saturation indicator	•
Stop & Go function	•
Recall function	•
Grease filter saturation indicator	•
Minute minder	•
Safety switch-off	•
Auto heat-up	•
Keeping warm	•
Individual setting options (e.g. buzzers)	•
Easy-to-clean canopy interior – CleanCover	•
Efficiency	
Energy efficiency class (A+++ – D)	A+
Power rating in off mode in W	0,3
Power rating in networked standby in W	2,0
ECO motor	•
Time until automatic switch to standby in min	10
Annual energy consumption in kWh/year	31,3
Time until automatic switch to networked standby in min	10
Time until automatic switch to off mode in min	10
Fluid dynamic efficiency class	A
Lighting efficiency class	NA
Grease filtering efficiency class	A
Cleaning and care	
Easy to clean ceramic glass	•
Quick cleaning of cooker hood interior	•
Intensive cleaning of cooker hood interior	•
Filter system	
Number of dishwasher-safe stainless steel grease filters (10-ply)	1
Exhaust air	
Air throughput at min. level (m^3/h) according to EN 61591	205
Air throughput at max. level (m^3/h) according to EN 61591	533
Air throughput in Intensive level (m^3/h) according to EN 61591	606
Sound power at min. level (dB(A) re 1 pW) according to EN 60704-3	41
Sound power at max. level (dB(A) re 1 pW) according to EN 60704-3	64
Sound power in Booster level (dB(A) re 1 pW) acc. to EN 60704-3	68
Sound pressure at min. level (dB(A) re 20 µPa) according to EN 60704-2-13	28,0
Sound pressure at max. level (dB(A) re 20 µPa) according to EN 60704-2-13	51,0

KMDA 7272-1 FR Silence
Induction hob with integrated vapour extraction
806 mm | Extraction and recirculation | SilenceMotor | Individual cooking zones



EAN: 4002516974673 / Material number: 12968740 /
Old Material Number: 26727276GB

Noise pressure level in Intensive level (dB(A) re 20 µPa) according to EN 60704-2-13	54,0
Recirculation	
Air throughput at min. level (m^3/h) according to EN 61591	160
Air throughput at max. level (m^3/h) according to EN 61591	475
Air throughput in Booster level 1 (m^3/h) according to EN 61591	510
Sound power at min. level (dB(A) re 1 pW) according to EN 60704-3	46,0
Sound power at max. level (dB(A) re 1 pW) according to EN 60704-3	68,0
Sound power in Booster level 1 (dB(A) re 1 pW) acc. to EN 60704-3	70,0
Sound pressure at min. level (dB(A) re 20 µPa) according to EN 60704-2-13	33,0
Sound pressure at max. level (dB(A) re 20 µPa) according to EN 60704-2-13	55,0
Sound pressure in Booster level 1 (dB(A) re 20 µPa) acc. to EN 60704-2-13	57,0
Safety	
Safety switch-off	•
Lock function	•
System lock	•
Integrated cooling fan	•
Overheating protection	•
Residual heat indicator	•
Connection for window contact switch	•
Technical data	
Dimensions in mm (width)	806
Dimensions in mm (height)	194
Dimensions in mm (depth)	526
Casing height incl. connection box in mm	194
Cutout dimensions in mm (width) with surface-mounted installation	780 mm
Cutout dimensions in mm (depth) with surface-mounted installation	500 mm
Weight in kg	16
Total rated load in kW	7,50
Voltage in V	230
Frequency in Hz	50-60
Length of supply lead in m	1,6
Accessories included	
Mains cable	Yes
Active charcoal filter DKF 35-P	•
Plug&Play adapter	•

KMDA 7272-1 FR Silence

Induction hob with integrated vapour extraction

806 mm | Extraction and recirculation | SilenceMotor | Individual cooking zones

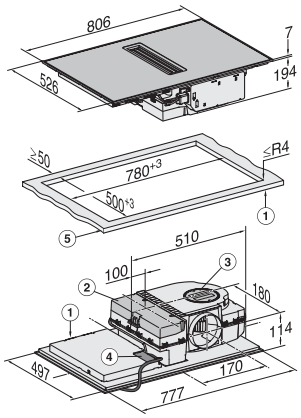

KMDA7272-1FR, KMDA7272FR, KMDA7473FR, KMDA7473-1FR

1) Front, 2) removable drip tray, 3) cleaning flap, 4) Mains connection box with mains connection cable, L = 1600 mm, 5) Worktop thickness, Exhaust air and guided recirculation mode: ≥10 mm, Plug&Play operation: ≥10 mm – ≤40 mm

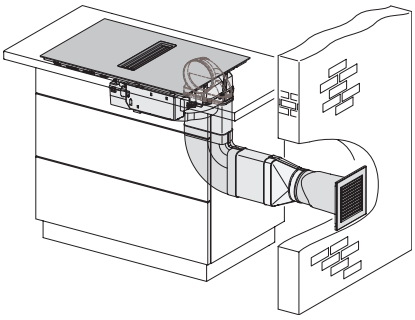

KMDA7272-1FL/FR, KMDA7473-1FL/FR, KMDA7272FL/FR, KMDA7473FL/FR, Exhaust air

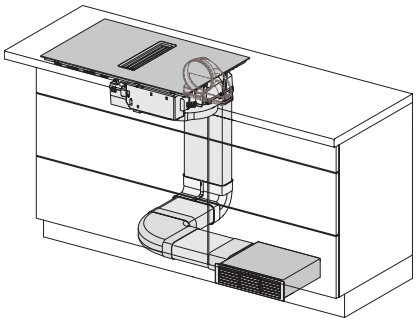

KMDA7272-1FL/FR, KMDA7473-1FL/FR, KMDA7272FL/FR, KMDA7473FL/FR, Air circulation

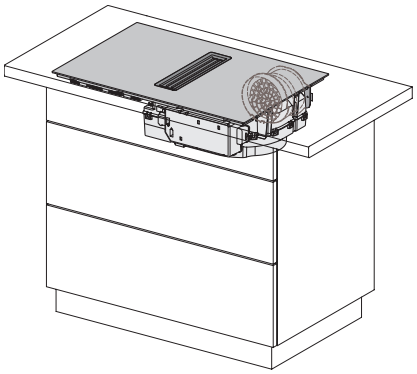

KMDA7272-1FL/FR, KMDA7473-1FL/FR, KMDA7272FL/FR, KMDA7473FL/FR, Plug&Play

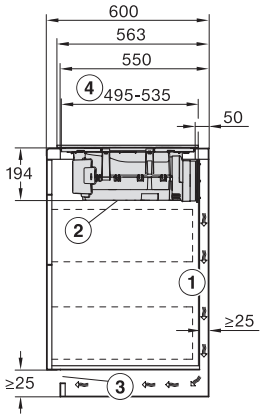

KMDA7272-1FR, KMDA7473-1FR, KMDA7272FR, KMDA7473FR – Side view lying on top, Plug&Play

?When routing the exhaust air between the cabinet wall and an adjacent room wall or an adjacent piece of furniture, a minimum distance of 25 mm must be observed., ?The removable collection tray and the cleaning flap must be accessible after installation., ?The cross-section of the vent opening must be at least 425 cm², ?Distance from the front of the lower box to the end of the plug & play adapter

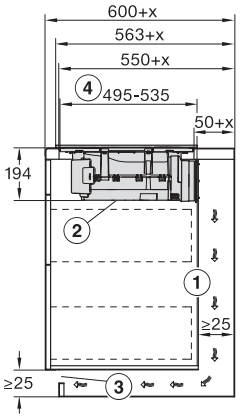

KMDA7272-1FR, KMDA7473-1FR, KMDA7272FR, KMDA7473FR – Side view lying on top+X, Plug&Play

?When routing the exhaust air between the cabinet wall and an adjacent room wall or an adjacent piece of furniture, a minimum distance of 25 mm must be observed. If the carcase rear wall is > 555 mm from the worktop front, the Plug&Play adapter must be extended with a supplementary set from Miele., ?The removable drip tray and the cleaning flap must be accessible after installation., ?The cross-section of the vent opening must be at least 425 cm², ?Distance from the front of the lower box to the end of the plug & play adapter, , x Dimension by which the worktop depth is greater than 600 mm.

KMDA 7272-1 FR Silence
Induction hob with integrated vapour extraction
806 mm | Extraction and recirculation | SilenceMotor | Individual cooking zones

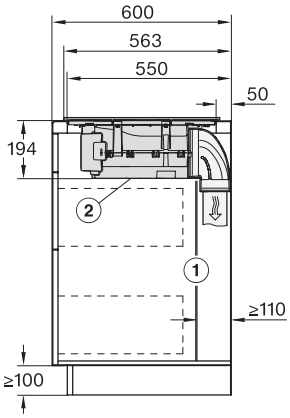

KMDA7272-1FR, KMDA7473-1FR, KMDA7272FR, KMDA7473FR – Side view lying on top

?The rear wall of the cabinet must be removable for servicing. A minimum distance of 110 mm must be maintained for routing the exhaust air duct between the cabinet wall and an adjacent room wall or furniture., ?The removable collection tray and the cleaning flap must be accessible after installation.

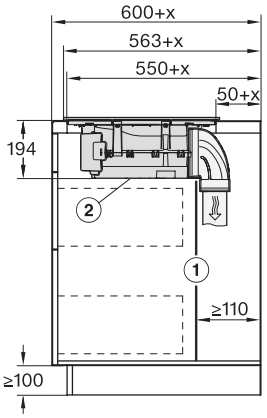

KMDA7272-1FR, KMDA7272FR, KMDA7473FR – Side view lying on top+X

?The rear wall of the cabinet must be removable for servicing. A minimum distance of 110 mm must be maintained for routing the exhaust air duct between the cabinet wall and an adjacent room wall or furniture., ?The removable collection tray and the cleaning flap must be accessible after installation., , x Dimension by which the worktop depth is greater than 600 mm.

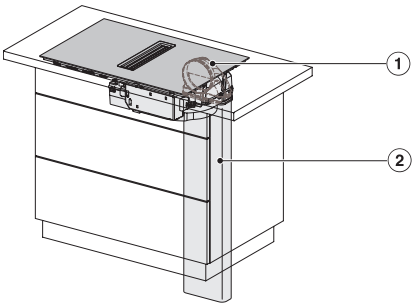

KMDA7272-1FL/FR, KMDA7473-1FL/FR, KMDA7272FL/FR, KMDA7473FL/FR – Installation variant 1 Basis

1) DFK-AK 90, 2) DFK-R 1000

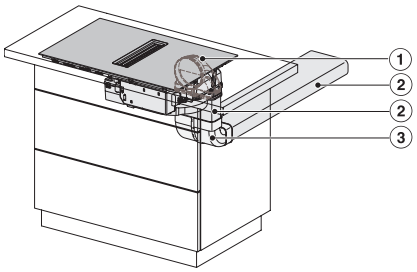

KMDA7272-1FL/FR, KMDA7473-1FL/FR, KMDA7272FL/FR, KMDA7473FL/FR – Installation variant 2 Basis

1) DFK-AK 90, 2) DFK-R 1000, 3) DFK-BV 90

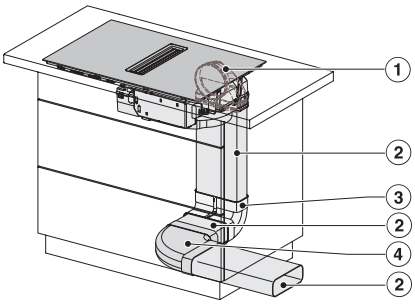

KMDA7272-1FL/FR, KMDA7473-1FL/FR, KMDA7272FL/FR, KMDA7473FL/FR -Installation variant 3 Basis

1) DFK-AK 90, 2) DFK-R 1000, 3) DFK-BV 90, 4) DFK-BH 90

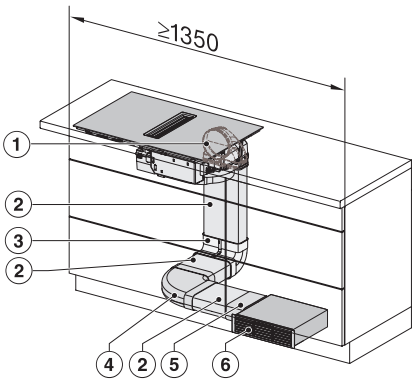

KMDA7272-1FL/FR, KMDA7473-1FL/FR, KMDA7272FL/FR, KMDA7473FL/FR – Installation variant 4 Circulating air

1) DFK-AK 90, 2) DFK-R 1000, 3) DFK-BV 90, 4) DFK-BH 90, 5) DFK-V, 6) DUU 1500, , The minimum width of the cabinet is 1350 mm.

KMDA 7272-1 FR Silence
Induction hob with integrated vapour extraction
806 mm | Extraction and recirculation | SilenceMotor | Individual cooking zones

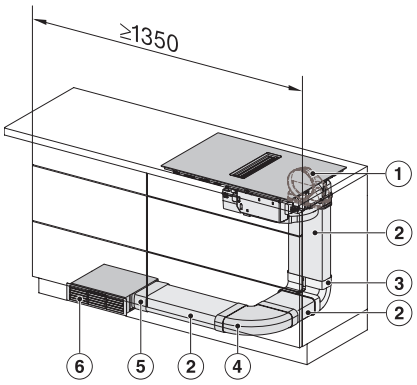

KMDA7272-1FL/FR, KMDA7473-1FL/FR, KMDA7272FL/FR, KMDA7473FL/FR – Installation variant 5 Circulating air

1) DFK-AK 90, 2) DFK-R 1000, 3) DFK-BV 90, 4) DFK-BH 90, 5) DFK-V, 6) DUU 1500, , The minimum width of the cabinet is 1350 mm.

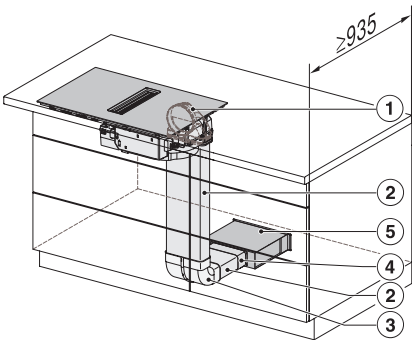

KMDA7272-1FL/FR, KMDA7473-1FL/FR, KMDA7272FL/FR, KMDA7473FL/FR – Installation variant 6 Circulating air

1) DFK-AK 90, 2) DFK-R 1000, 3) DFK-BV 90, 4) DFK-V, 5) DUU 1500, , The minimum depth of the cabinet is 935 mm.

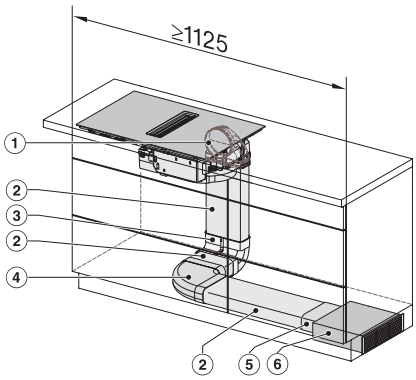

KMDA7272-1FL/FR, KMDA7473-1FL/FR, KMDA7272FL/FR, KMDA7473FL/FR – Installation variant 13 Circulating air

1) DFK-AK 90, 2) DFK-R 1000, 3) DFK-BV 90, 4) DFK-BH 90, 5) DFK-V, 6) DUU 1500, , The minimum width of the cabinet is 1125 mm.

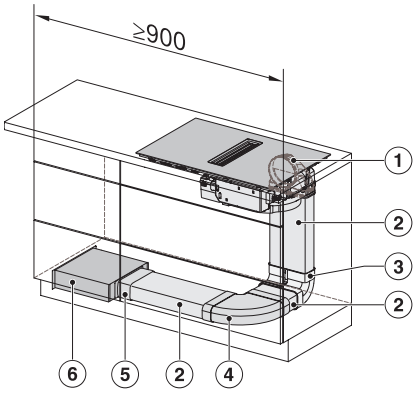

KMDA7272-1FL/FR, KMDA7473-1FL/FR, KMDA7272FL/FR, KMDA7473FL/FR – Installation variant 14 Circulating air

1) DFK-AK 90, 2) DFK-R 1000, 3) DFK-BV 90, 4) DFK-BH 90, 5) DFK-V, 6) DUU 1500, , The minimum width of the cabinet is 900 mm.

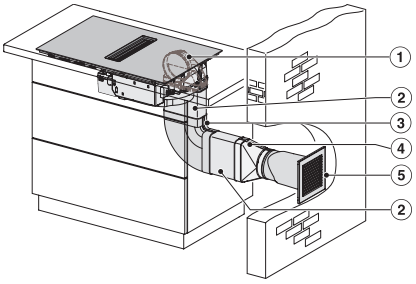

KMDA7272-1FL/FR, KMDA7473-1FL/FR, KMDA7272FL/FR, KMDA7473FL/FR – Installation variant 9 Exhaust air

1) DFK-AK 90, 2) DFK-R 1000, 3) DFK-BH 90, 4) DFK-A, 5) DMK 150-1

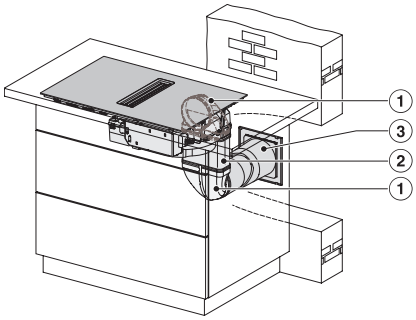

KMDA7272-1FL/FR, KMDA7473-1FL/FR, KMDA7272FL/FR, KMDA7473FL/FR – Installation variant 10 Exhaust air

1) DFK-AK 90, 2) DFK-R 1000, 3) DMK 150-1

KMDA 7272-1 FR Silence
Induction hob with integrated vapour extraction
806 mm | Extraction and recirculation | SilenceMotor | Individual cooking zones

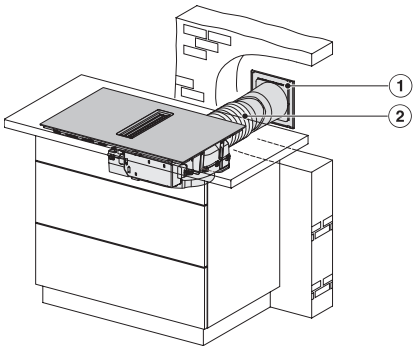

KMDA7272-1FL/FR, KMDA7473-1FL/FR, KMDA7272FL/FR, KMDA7473FL/FR – Installation variant 11 Exhaust air

1) DMK 150-1, 2) Flex hose

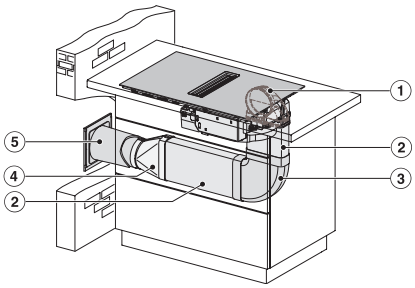

KMDA7272-1FL/FR, KMDA7473-1FL/FR, KMDA7272FL/FR, KMDA7473FL/FR – Installation variant 12 Exhaust air

1) DFK-AK 90, 2) DFK-R 1000, 3) DFK-BH 90, 4) DFK-A, 5) DMK 150-1

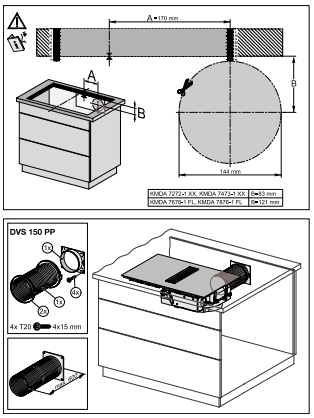

Installation plan DVS150PP

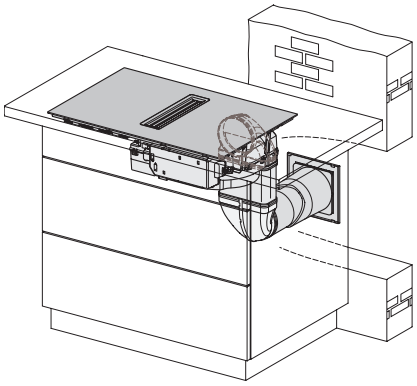

KMDA7272-1FL/FR, KMDA7473-1FL/FR, KMDA7272FL/FR, KMDA7473FL/FR, Exhaust air

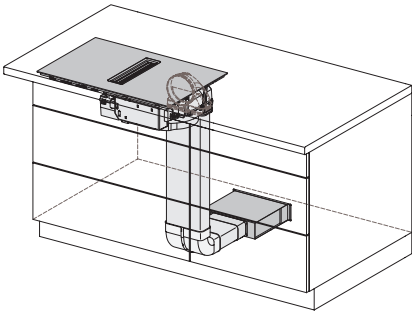

KMDA7272-1FL/FR, KMDA7473-1FL/FR, KMDA7272FL/FR, KMDA7473FL/FR, Air circulation

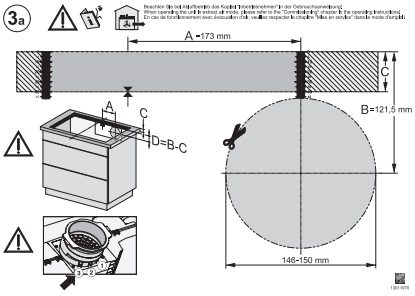

KMDA7272-1FL/FR, KMDA7473-1FL/FR – surface installation, 21 cm, drilling template

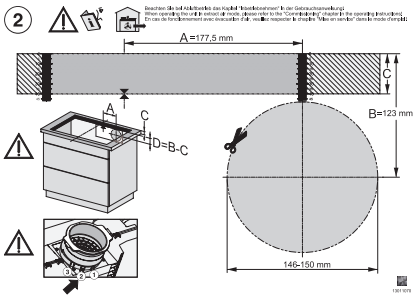

KMDA7272-1FL/FR, KMDA7473-1FL/FR – surface installation, drilling template