Miele

WWA120 WCS 8kg Active
W1 front-loader washing machine:
A -10 %* I 8 kg I 1400 rpm I CapDosing I Honeycomb drum I AddLoad



EAN: 4002516867302 / Material number: 12721160 / Old Material Number: 11WA1201GB

- Tested for 20 years of perfect laundry care*
- Save even more energy with A -10 %**
- Exclusive CapDosing range for different fabrics and stains***
- Our honeycomb drum ensures that laundry stays in perfect condition
- Add or remove individual items during the wash cycle with AddLoad

* During the development phase of the W1 / W2 washing machine series, Miele tested models and core components in 5000 wash loads (= 5 wash loads per week for 50 weeks per year) in various programmes. More: miele.com/20years

** 10 % more economical than the threshold value (52) for energy efficiency class A

*** Patent EP 2 365 120

General information	
Model identifier	WWA120 WCS 8kg Active
Manufacturer material number	12721160
EAN number	4002516867302
Marketing class	Silver
Construction type	
Suitable for stacking	•
Door hinging	right
Side-by-side	•
Slot-in	•
Model	
Product brand	W1 White Edition
Front-loader	•
Spinning	
Max. spin speed	1400
Rinse hold	•
Without spin function	•
Design	
Appliance colour	Lotus white
Control panel colour	Lotus white
Door design	Obsidian black with white ring
Rotary selector colour	Lotus White
Control panel version	5° inclined
Control type	Rotary control
Display	EasyControl yellow
Cleaning performance	
CapDosing portioned dispensing	•
Gentle laundry care	
Honeycomb drum	•
Load in kg	8
User convenience	
Delay start up to 24 hours	•
Time left display	•
AutoClean detergent drawer	•
AddLoad	•
Efficiency	
Energy efficiency class (A–G)	A
More economical than the threshold value (52) for energy efficiency class A	10%
Weighted energy consumption per 100 operating cycles for the wash cycle in kWh	43
Weighted water consumption per cycle in l	48
Spin efficiency class (A–G)	B
Acoustic airborne noise emission class (spin cycle; A–D)	A
Sound emissions during spin cycle in dB(A) re 1 pW	72
Duration of the “ECO 40–60” programme at nominal capacity	219
Power rating in off mode in W	0,30

WWA120 WCS 8kg Active
W1 front-loader washing machine:
A -10 %* I 8 kg I 1400 rpm I CapDosing I Honeycomb drum I AddLoad



EAN: 4002516867302 / Material number: 12721160 / Old Material Number: 11WA1201GB

Low temperature wash "Cold" and "20 °C"	•
Automatic load control	•
Flow meter	•
Foam sensing	•
ProfiEco motor	•
Wash programmes	
Cottons (coloureds)	•
Cottons with pre-wash	•
Minimum iron	•
Delicates	•
Woollens (hand-washable)	•
Express 20	•
Dark garments / Denim	•
Outerwear	•
Proofing	•
Separate rinse/Starch	•
Drain / Spin	•
ECO 40-60	•
Washing extras	
Short	•
Soak	•
Water plus	•
Additional rinse cycle	•
Safety	
Water protection system	Watercontrol-System
Safety lock	•
PIN-Code	•
Optical interface	•
Technical data	
Dimensions (H x W x D) in mm	850 x 596 x 643
Dimensions in mm (width)	596
Dimensions in mm (height)	850
Dimensions in mm (depth)	643
Appliance depth in mm with opened door	1077
Appliance depth w/o door in mm	600
Weight in kg	82
Voltage in V	220-240
Fuse rating in A	13
Frequency in Hz	50
Total rated load in kW	2,10-2,40
Length of water inlet hose in m	1,60
Length of water drain hose in m	1,50
Length of supply lead in m	2

WWA120 WCS 8kg Active
W1 front-loader washing machine:
A -10 %* I 8 kg I 1400 rpm I CapDosing I Honeycomb drum I AddLoad

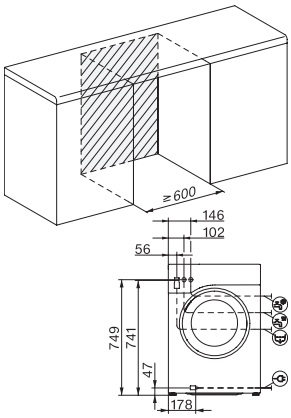

W1 drawing, facia 5 degree, measures in mm

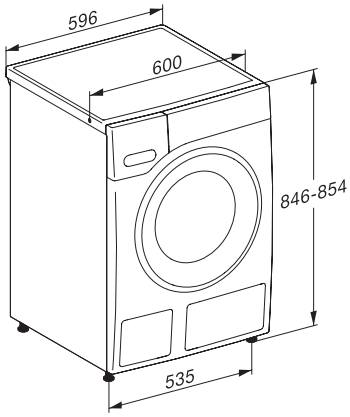

W1 drawing, facia 5 degree, measures in mm

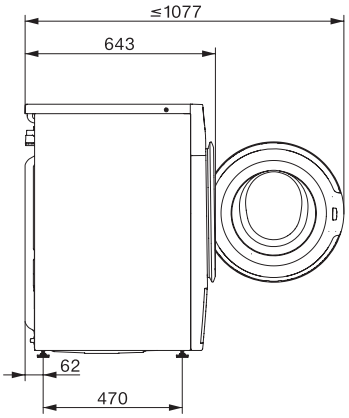

W1 drawing, facia 5 degree, measures in mm

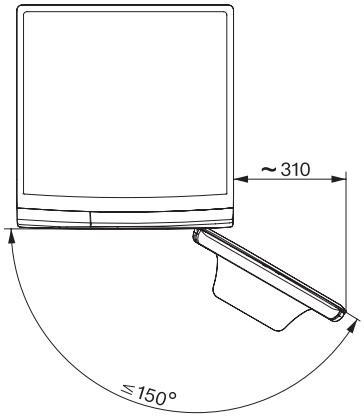

W1 drawing, facia 5 degree, measures in mm