KFMC 3844 L
MasterCool fridge-freezer
-



- Food stays fresh for up to 5 times longer – MasterFresh Pro
- -
- Fresh supplies without unpleasant odours – Longlife AirClean System
- Ice cubes for cold drinks – IceMaker
- Practical illumination with elegant LEDs – #BrilliantLight Pro

EAN: 4002516914556 / Material number: 12866690 /
Old Material Number: 38384410EU1

General information	
Model identifier	KFMC 3844 L
Manufacturer material number	12866690
EAN number	4002516914556
Marketing class	Diamond
Appliance category	
Fridge-freezer	•
Construction type	
Built-in appliance	•
Integrated appliance	•
Door hinge	Left
Convertible door hinging	•
Side-by-side enabled	•
Design	
Lighting	BrilliantLight Pro
SmartLight	•
User convenience	
Networking with Miele@home	•
Operating concept	M Touch Pro
Sabbath mode	•
Freshness system	MasterFresh Pro + DailyFresh ExtraCool
Longlife AirClean system	•
DynaCool	•
Holiday mode	•
NoFrost	•
DuplexCool Pro	•
SoftClose	•
SelfClose	•
Number of IceMakers with mains water connection	1
IceMaker with mains water connection	•
Push2open	•
FullAccess	•
EasyClean	•
MaxLoad hinge	•
Control system	
Precise adjustment	Fridge and freezer temperature
Fridge compartment can be switched off	No
Independent temperature regulation of fridge and freezer zones	Yes
SuperCool&AirClean	•
SuperFreeze	•
No. of temperature zones	3
Eco mode	•
QuickIce	•
Fridge/Fridge section	
Height-adjustable, full-width tempered glass shelves	1

KFMC 3844 L
MasterCool fridge-freezer
-



EAN: 4002516914556 / Material number: 12866690 /
Old Material Number: 38384410EU1

Height-adjustable, half-width tempered glass shelves	2
Number of VeggieBoxes	1
No. of crisper drawers	2
Door shelves for jars	2
Door rack for bottles	1
Freezer/Freezer section	
Number of freezer baskets	3
of which on telescopic runners	2
Efficiency	
Energy efficiency class (A–G)	D
Annual energy consumption in kWh	280,00
Energy consumption in 24 h in kWh	0,76
Safety	
Spill-proof glass shelves	•
Acoustic door alarm	•
Acoustic temperature alarm	•
Technical data	
Niche width in mm min.	914
Niche width in mm max.	914
Niche height in mm min.	2134
Niche height in mm max.	2134
Niche depth in mm	610
Appliance width in mm	895
Appliance height in mm	2123
Appliance depth in mm	608
Weight in kg	229,0
Door hinge technology	Fixed door
Max. door front weight – refrigerator, in kg	47
Max. door front weight – freezer, in kg	14
Climate range	SN-T
Refrigerator compartment in l	382
including PerfectFresh zone in l	60
4* freezer compartment in l	197
Total usable capacity in l	579
Storage time in case of fault in h	19
Freezer capacity in kg/24 h	14,00
Acoustic airborne noise emission class (A–D)	C
Sound emissions in dB(A) re 1 pW	39
Current consumption (mA)	3000
Voltage in V	220-240
Fuse rating in A	10
Number of phases	1
Frequency in Hz	50-60
Length of supply lead in m	3,0
Replacing lamps	Service
Accessories included	
Water filter	Ja
Ice scoop	•

KFMC 3844 L
MasterCool fridge-freezer

–

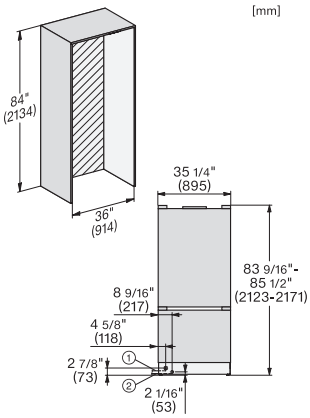

KFMC3642R, KFMC3842L, KFMC3844R, KFMC3844L, MasterCool III, installation, panel ready

Information for KFMC 3642 L + R (US/CD) only, View from the front, 1. Mains connection cable, L = 3000 mm (118 inch), 2. Water connection L = 1800 mm (70 inch), Information for KFMC 3844 L + R (EU) , 1. Mains connection cable, L = 3000 mm , 2. Water connection L = 1800 mm

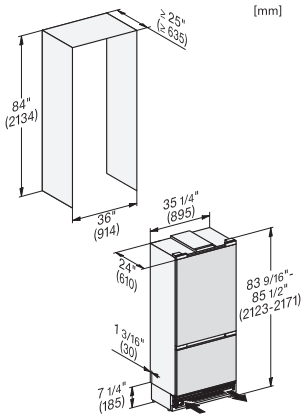

KFMC3642R, KFMC3842L, KFMC3844R, KFMC3844L, MasterCool III, integration, panel ready

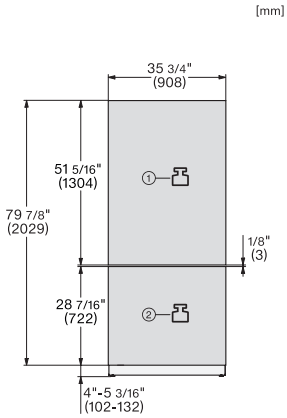

KFMC3642R, KFMC3842L, KFMC3844R, KFMC3844L, MasterCool III, front view

1. 47 kg / 103,6 lbs, 2. 14 kg / 30,8 lbs

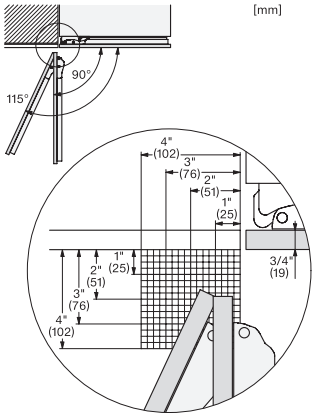

KFMC3632R+L, KFMC3642R+L, KFMC3836R+L, KFMC3834R+L, KFMC3858FD, MasterCool III, hinge clearance, installation

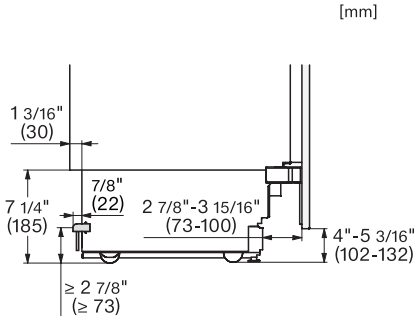

KFMC3632R+L, KFMC3642R+L, KFMC3836R+L, KFMC3834R+L, KFMC3858FD, MasterCool III, Side-view bottom, installation

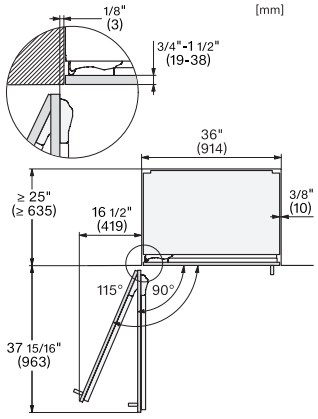

KFMC3642R, KFMC3642L, KFMC3844R, KFMC3844L, MasterCool III, panel ready, top view