FNS 7794 E
Built-in freezer, 178 cm niche height
with NoFrost and 8 freezer drawers on telescopic runners for max. convenience.



- Ice cubes thanks to the IceMaker with fresh water connection
- Double the convenience with Miele's Ice&PizzaBox
- No icing up of food and no need to defrost thanks to NoFrost
- Optimum and maintenance-free LED lighting in compartment
- Soft closing of the door with SoftClose

EAN: 4002516420668 / Material number: 11738290 /
Old Material Number: 37779400AUS

General information	
Model identifier	FNS 7794 E
Manufacturer material number	11738290
EAN number	4002516420668
Marketing class	Diamond
Appliance category	
Freezer	•
Construction type	
Built-in appliance	•
Integrated appliance	•
Door hinge	Left
Convertible door hinging	•
Side-by-side enabled	•
Design	
Freezer compartment lighting	LED
IceMaker lighting	•
User convenience	
Networking with Miele@home	•
Party mode	•
NoFrost	•
VarioRoom	•
SoftClose	•
Ice cube maker with mains water connection (IceMaker)	•
Control system	
Operating concept	FreshTouch
SuperFreeze	•
No. of temperature zones	1
Sabbath mode	•
Freezer/Freezer section	
Number of freezer drawers	8
of which on runners	6
of which Ice&PizzaBox	2
Safety	
Lock function	•
Acoustic door alarm	•
Acoustic temperature alarm	•
Optical door alarm	•
Optical temperature alarm	•
Power cut indication for freezer section	•
Technical data	
Niche width in mm min.	560
Niche width in mm max.	570
Niche height in mm min.	1772
Niche height in mm max.	1788
Niche depth in mm	550
Appliance width in mm	559
Appliance height in mm	1770
Appliance depth in mm	544

FNS 7794 E
Built-in freezer, 178 cm niche height
with NoFrost and 8 freezer drawers on telescopic runners for max. convenience.



EAN: 4002516420668 / Material number: 11738290 /
Old Material Number: 37779400AUS

Weight in kg	73,7
Door hinge technology	Fixed door
Max. door front weight – refrigerator, in kg	26
Climate range	SN-T
Total usable capacity in l	213
Current consumption (mA)	1300
Voltage in V	220-240
Fuse rating in A	10
Number of phases	1
Frequency in Hz	50-60
Length of supply lead in m	2,2
Replacing lamps	Service
Accessories included	
Water filter	Nein
Ice scoop	•

FNS 7794 E

Built-in freezer, 178 cm niche height
with NoFrost and 8 freezer drawers on telescopic runners for max. convenience.

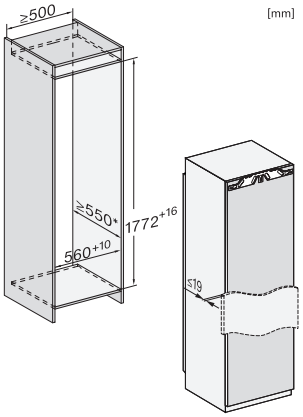

K7733E, K7763E, K7732D, K7732E, K7734F, K7764E, K7743E, K7744E, K7773D, K7774D, built-in

*The declared energy consumption was calculated in a 560 mm deep niche. The appliance is fully functional in a 550 mm niche but the energy consumption will be slightly higher.

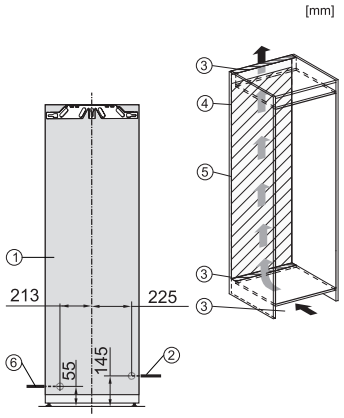

FNS7794E, FNS7774D, installation

1. View from the front, 2. Mains connection cable, L = 2100 mm, 3. Ventilation cut-out min. 200 cm², 4. Ventilation, 5. No connections permitted in this area, 6. Water connection L = 2000 mm