KM 6002 LPT

Oven-controlled electric hob unit
with 4 cooking zones incl. 1 Vario zone for extra cooking convenience.

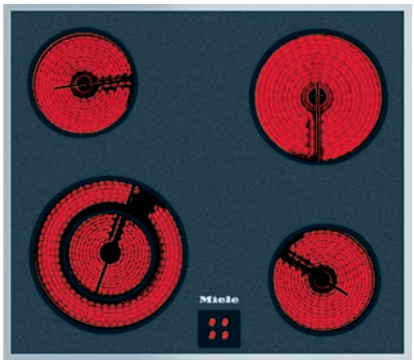

- Attractive design – 574 mm wide with all-round frame
- Particularly versatile – 4 cooking zones incl. 1 Vario zone
- Safe – residual heat indicator for every cooking zone

EAN: 4002514359540 / Material number: 07077460 /
Old Material Number: 26600252D

General information	
Model identifier	KM 6002 LPT
Manufacturer material number	07077460
EAN number	4002514359540
Marketing class	Silver
Heating type	
Heating type	Electric
Construction type	
Combined with cooker	•
Design	
Elegant glass ceramic surface	•
Ceramic surface colour	Black
Stainless-steel frame	•
Print design	LightPrint
Surface-mounted installation	•
Cooking zone details	
Number of cooking zones	4
1st cooking zone/cooking area	
Position	front left
Type	Dual-circuit ring
Size in mm	Ø 120 / Ø 210
Max. rating in W	750/2200
2nd cooking zone/cooking area	
Position	rear left
Type	Single-circuit ring
Size in mm	Ø 145
Max. rating in W	1200
3rd cooking zone/cooking area	
Position	rear right
Type	Single-circuit ring
Size in mm	Ø 180
Max. rating in W	1800
4th cooking zone/cooking area	
Position	front right
Type	Single-circuit ring
Size in mm	Ø 145
Max. rating in W	1200
User convenience	
Extended cooking zone	•
Operation via knobs	•
Display colour	Red
Efficiency	
Residual heat utilisation	•
Cleaning and care	
Easy to clean ceramic glass	•
Safety	
Residual heat indicator	•

KM 6002 LPT
Oven-controlled electric hob unit
with 4 cooking zones incl. 1 Vario zone for extra cooking convenience.

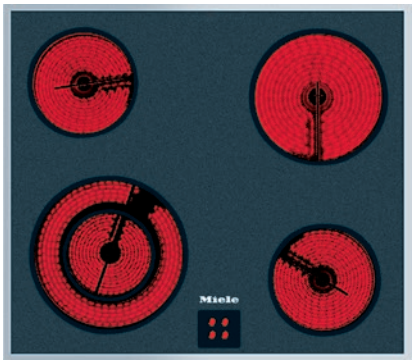

EAN: 4002514359540 / Material number: 07077460 /
Old Material Number: 26600252D

Technical data	
Dimensions (H x W x D) in mm	40 x 574 x 514
Dimensions in mm (width)	574
Dimensions in mm (height)	40
Dimensions in mm (depth)	514
Cutout dimensions in mm (width) with surface-mounted installation	560 mm
Cutout dimensions in mm (depth) with surface-mounted installation	500 mm
Weight in kg	8
Total rated load in kW	6,40-7,00
Voltage in V	230-240
Frequency in Hz	50-60
Accessories included	
Razor-blade scraper	•
Mains cable	Yes

KM 6002 LPT
Oven-controlled electric hob unit
with 4 cooking zones incl. 1 Vario zone for extra cooking convenience.

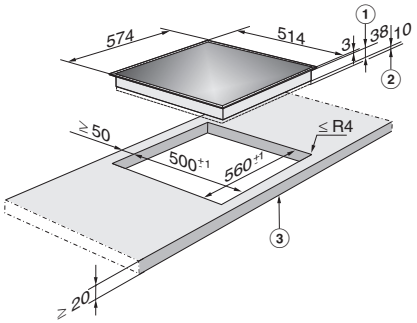

KM 6002 LPT/KM 6003 LPT, KM 6006 (Installation drawing

1. Casing depth, 2. Space for fixing elements and power supply, 3. Front