WEG365 WCS PWash&9kg
W1 front-loader washing machine:
A I 9 kg I 1400 rpm I QuickPowerWash I Pre-ironing I Miele@home



- QuickPowerWash ensures fast, efficient results in just 49 minutes*
- Our honeycomb drum ensures that laundry stays in perfect condition
- The Pre-ironing Extra reduces creasing, saving up to 50 % time and effort**
- Display & convenient operation at your fingertips – ComfortSensor
- Complete app control of your washing machine with Miele@home***

* This applies to all Miele washing machines that enable the process and machine-related parameters presented in the summary of the WL 1110/18 test report to be implemented.

** Patent EP 2 088 231

*** This is a separate digital offer from Miele & Cie. KG. The range of functions can vary depending on the model and the country. Acceptance of the Terms and Conditions and Privacy Policy for Miele digital products and services in the Miele app required. Miele reserves the right to change or discontinue the digital offer at any time.

EAN: 4002516257646 / Material number: 11359250 /
Old Material Number: 11EG3655GB

General information	
Model identifier	WEG365 WCS PWash&9kg
Manufacturer material number	11359250
EAN number	4002516257646
Marketing class	Platinum
Construction type	
Suitable for stacking	•
Door hinging	right
Side-by-side	•
Slot-in	•
Can be built-under	•
Model	
Product brand	W1 Chrome Edition
Front-loader	•
Spinning	
Max. spin speed	1400
Rinse hold	•
Without spin function	•
Design	
Appliance colour	Lotus white
Control panel colour	Lotus white
Door design	Chrome
Rotary selector colour	Lotus White / Chrome ring
Control panel version	Straight
Control type	Rotary control
Display	ComfortSensor white, 1 line
Cleaning performance	
Innovative PowerWash technology	•
CapDosing portioned dispensing	•
Gentle laundry care	
Honeycomb drum	•
Load in kg	9
User convenience	
Networking with Miele@home	•
Delay start up to 24 hours	•
Time left display	•
Programme sequence indicator	•
Drum lighting	LED
MultiLingua	•
AutoClean detergent drawer	•
AddLoad	•
Efficiency	
Energy efficiency class (A–G)	A
Weighted energy consumption per 100 operating cycles for the wash cycle in kWh	49
Weighted water consumption per cycle in l	48
Spin efficiency class (A–G)	B

WEG365 WCS PWash&9kg
W1 front-loader washing machine:
A I 9 kg I 1400 rpm I QuickPowerWash I Pre-ironing I Miele@home



EAN: 4002516257646 / Material number: 11359250 /
Old Material Number: 11EG3655GB

Acoustic airborne noise emission class (spin cycle; A–D)	A
Sound emissions during spin cycle in dB(A) re 1 pW	68
Duration of the “ECO 40–60” programme at nominal capacity	199
Power rating in off mode in W	0,40
Power rating in networked standby in W	0,80
Low temperature wash "Cold" and "20 °C"	•
Automatic load control	•
Flow meter	•
Foam sensing	•
ProfiEco motor	•
Wash programmes	
QuickPowerWash	•
Automatic plus	•
Cottons (coloureds)	•
Minimum iron	•
Delicates	•
Shirts	•
Silk (hand-washable)	•
Woollens (hand-washable)	•
Express 20	•
Dark garments / Denim	•
Outerwear	•
Proofing	•
Sportswear	•
Clean machine	•
Cottons arrow	•
Separate rinse/Starch	•
Drain / Spin	•
ECO 40-60	•
Washing extras	
SingleWash	•
Short	•
Soak	•
Pre-wash	•
Water plus	•
Additional rinse cycle	•
Extra quiet	•
Pre-ironing with steam	•
Buzzer	•
AllergoWash	•
Safety	
Water protection system	Watercontrol-System
Safety lock	•
PIN-Code	•
Optical interface	•
Technical data	
Dimensions (H x W x D) in mm	850 x 596 x 636
Dimensions in mm (width)	596

WEG365 WCS PWash&9kg
W1 front-loader washing machine:
A I 9 kg I 1400 rpm I QuickPowerWash I Pre-ironing I Miele@home



EAN: 4002516257646 / Material number: 11359250 /
Old Material Number: 11EG3655GB

Dimensions in mm (height)	850
Dimensions in mm (depth)	636
Appliance depth in mm with opened door	1054
Appliance depth w/o door in mm	600
Weight in kg	93
Voltage in V	220-240
Fuse rating in A	13
Frequency in Hz	50
Total rated load in kW	2,10-2,40
Length of water inlet hose in m	1,60
Length of water drain hose in m	1,50
Length of supply lead in m	2
Replacing lamps	Service
Accessories included	
3 Caps	•
Voucher for Miele detergent	•
Available display languages	
Available display languages via MultiLingua	□□, □□□□, deutsch, english (AU), english (GB), □□□, □□□, bahasa malaysia, português, español

WEG365 WCS PWash&9kg
W1 front-loader washing machine:
A I 9 kg I 1400 rpm I QuickPowerWash I Pre-ironing I Miele@home

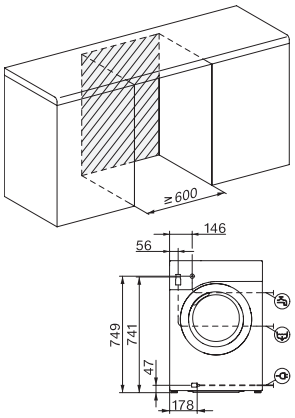

W1 installation drawing, slanted facia or straight facia, measures in mm

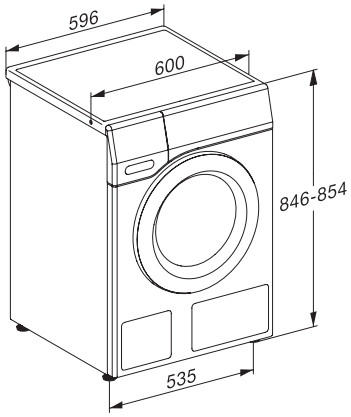

W1 drawing, slanted facia or straight facia, measures in mm

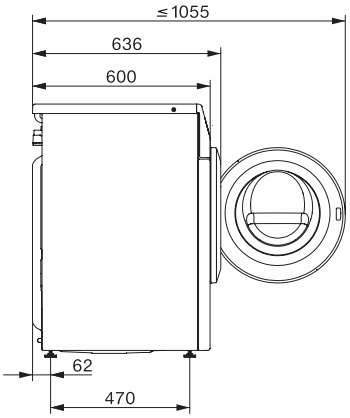

W1 drawing, slanted facia or straight facia, measures in mm

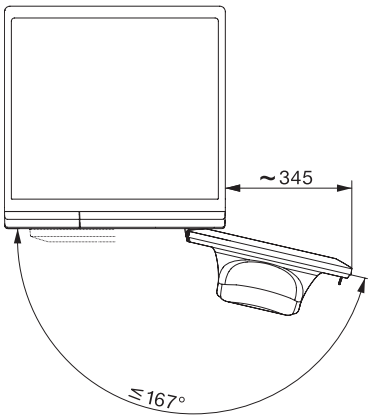

W1 drawing, slanted facia or straight facia, measures in mm