KM 8565 FL
Induction hob with onset controls
620 mm | PowerFlex cooking areas | M Sense ready



EAN: 4002516973010 / Material number: 12944680 /
Old Material Number: 26185651GB

- 4 cooking zones incl. 2 powerful PowerFlex cooking areas
- Precise settings via 4 MultiSlide sliders including intelligent networking
- Prepared for cooking and frying assistance with M Sense cookware – M Sense ready
- Shortest heat-up times thanks to Booster level
- A width of 620 mm for surface-mounted or flush-fit installation

KM 8565 FL
Induction hob with onset controls
620 mm | PowerFlex cooking areas | M Sense ready

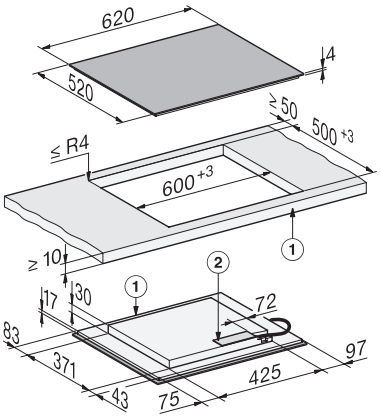

KM8565FL, KM8565FL MattFinish, surface-mounted (*Fußnote) Installation drawing

1) front, 2) Mains connection box, The mains connection cable (L = 1440 mm) is enclosed loose

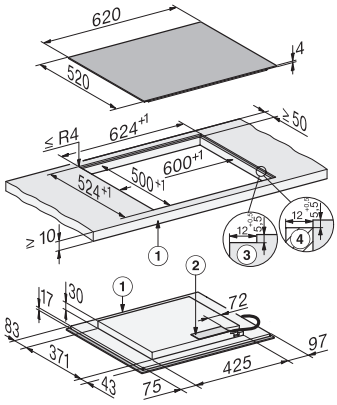

KM8565FL, KM8565FL MattFinish, flush (*Fußnote) (Installation drawing)

1) front, 2) Mains connection box, The mains connection cable (L = 1440 mm) is enclosed loosely, 3) Step milling natural stone worktop, 4) Wooden strip 12 mm (no supplied accessories)