# DGM 7440

Steam oven with microwave
for healthy cooking and rapid heating-up with networking.




- Large clear text display with sensor controls – DirectSensor
- Perfect results – DualSteam technology
- Consistent and quick microwave results – Quick & Gentle
- Perfect results guaranteed every time – Automatic programmes
- Shorter cooking durations by combining steam with microwave power

EAN: 4002516167112 / Material number: 11094470 / Old Material Number: 23744034GB

| | |
|---|---|
| **General information** | |
| Model identifier | DGM 7440 |
| Manufacturer material number | 11094470 |
| EAN number | 4002516167112 |
| Marketing class | Gold |
| **Construction type and design** | |
| VitroLine | • |
| **Construction type and design** | |
| Steam oven with microwave | • |
| Colour | Graphite grey |
| **Convenience features** | |
| Quick & Gentle | • |
| External steam generation | • |
| Menu cooking without transfer of taste | • |
| Automatic programmes with ability to make individual adjustments | • |
| Keeping warm | • |
| **Operating modes** | |
| Steam cooking | • |
| Microwave | • |
| Rapid cooking | • |
| Eco steam cooking | • |
| Defrosting | • |
| Reheat | • |
| Automatic programmes | • |
| Country-specific automatic programmes | • |
| Special applications | • |
| **User convenience** | |
| Networking with Miele@home | • |
| Display | DirectSensor |
| SoftOpen | • |
| MultiLingua | • |
| Popcorn function | • |
| Quantity-independent cooking | • |
| Steam cooking on up to 3 levels at the same time | • |
| Automatic menu cooking | • |
| Steam reduction before end of programme | • |
| Time of day display | • |
| Date display | • |
| Minute minder | • |
| Programmable start of cooking duration | • |
| Programmable end of cooking duration | • |
| Programmable cooking duration | • |
| Actual temperature display | • |
| Target temperature display | • |
| Buzzer when desired temperature is reached | • |
| Recommended temperature | • |
| Quick microwave | • |

# DGM 7440

Steam oven with microwave
for healthy cooking and rapid heating-up with networking.




EAN: 4002516167112 / Material number: 11094470 / Old Material Number: 23744034GB

| | |
|---|---|
| User programmes | • |
| Individual settings | • |
| **Efficiency** | |
| Power rating in off mode in W | 0,3 |
| Power rating in standby mode in W | 0,8 |
| Power rating in networked standby in W | 2,0 |
| Time until automatic switch to standby in min | 20 |
| Time until automatic switch to networked standby in min | 20 |
| Time until automatic switch to off mode in min | 20 |
| **Cleaning and care** | |
| Stainless-steel oven compartment with linen structure | • |
| External steam generator | • |
| Floor heater for condensate reduction | • |
| Soak programme | • |
| Quick-release side racks | • |
| Removable stainless-steel side racks | • |
| Descaling | • |
| CleanGlass door | • |
| **Steam techn./water supply** | |
| DualSteam | • |
| Fresh water container volume in l | 1,5 |
| Removal of fresh water container with Push2release | • |
| **Safety** | |
| Appliance cooling system and touch-cool front | • |
| Safety switch-off | • |
| System lock | • |
| Vapour cooling system | • |
| Sensor lock | • |
| **Technical data** | |
| Oven compartment volume in l | 40 |
| No. of shelf levels | 4 |
| Door hinge | Bottom |
| Oven light | 2 LED spots |
| Steam-cooking mode temperatures min. in °C | 40 |
| Steam-cooking mode temperatures max. in °C | 100 |
| Electronically controlled microwave power | • |
| Microwave power levels in W | 80 /150 /300 /450 /600 /850 /1000 |
| Niche width min. in mm | 560 |
| Niche width max. in mm | 568 |
| Niche height min. in mm | 450 |
| Niche height max. in mm | 452 |
| Niche depth in mm | 550 |
| Appliance dimensions (W x H x D) in mm | 595 x 455 x 569 |
| Weight in kg | 30,6 |
| Total rated load in kW | 3,30 |
| Voltage in V | 230 |
| Frequency in Hz | 50 |
| Fuse rating in A | 16 |

DGM 7440
Steam oven with microwave
for healthy cooking and rapid heating-up with networking.




EAN: 4002516167112 / Material number: 11094470 / Old Material Number: 23744034GB

| | |
|---|---|
| Number of phases | 1 |
| Mains cable with plug | • |
| Length of supply lead in m | 2 |
| Replacing lamps | Service |
| **Accessories included** | |
| Removable side runners (pair) | 1 |
| No. of perforated stainless-steel cooking container | 2 |
| Solid stainless steel cooking containers DGG 50 40 | 1 |
| Wire rack | 1 |
| Glass tray DMGS 100 30 | 1 |
| Descaling tablets | 2 |
| **Available display languages** | |
| Available display languages via MultiLingua | □□□□□□□□, □□, □□□□, deutsch, dansk, english, suomi, français, ελληνικά, italiano, □□□, □□□, hrvatski, bahasa malaysia, nederlands, norsk, polski, português, română, русский, svenska, srpski, slovenčina, slovenščina, español, čeština, türkçe, українська, magyar |

# DGM 7440

## Steam oven with microwave
## for healthy cooking and rapid heating-up with networking.

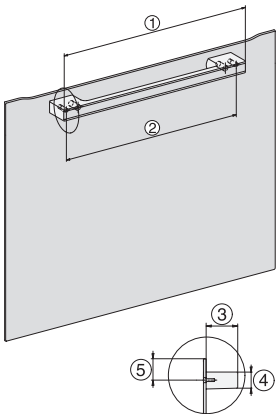


H7000 handle, glass, installation drawings

1) 400 mm, 2) 360 mm, 3) 47 mm, 4) 27 mm, 5) 32.5 mm

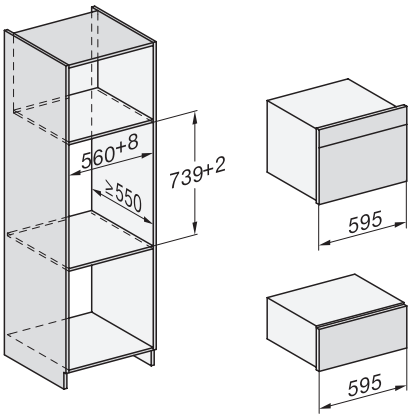


Installation DG, DGM, DGC XL, ESW7x20 installation drawings

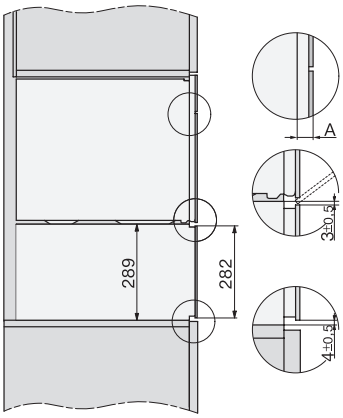


side view, DG, DGM, ESW7x20 installation drawings

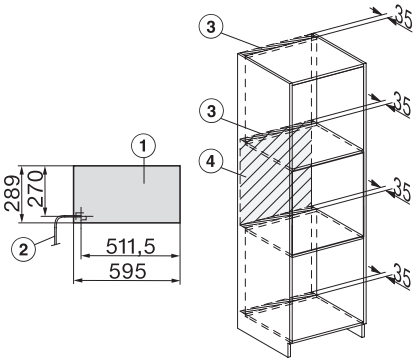


Installation, ESW7x20, DGM7x4x installation drawings

1) Front view, 2) Mains connection cable, L=2.000 mm, 3) Ventilation cut min. 180 cm², 4) No connection in this area

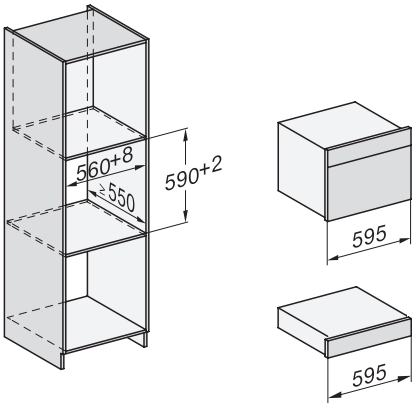


Installation_DG_DGM_DGC_XL_ESW7x10_EVS7010, installation drawings

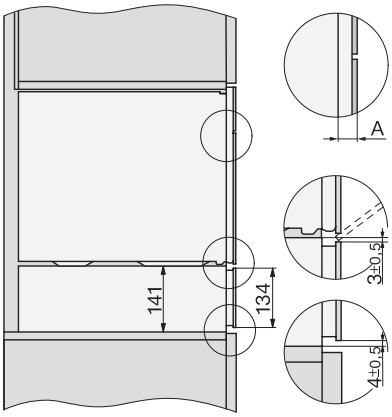


Side view_DG_DGM_ESW7x10_EVS7010 installation drawings

A) 22 mm glass, 23,3 mm stainless steel

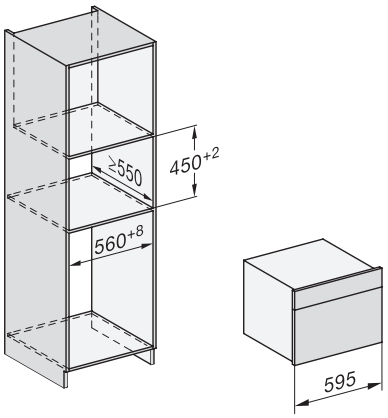


DG7xxx, DGM7xxx, installation drawings

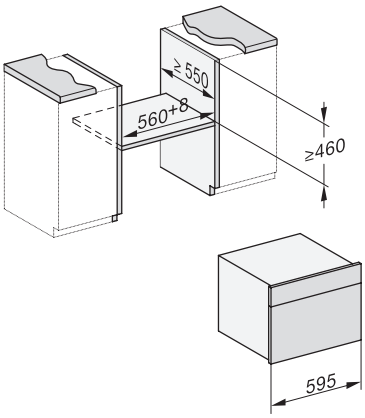


built-in DG DGM DGC XL build-under, installation drawing

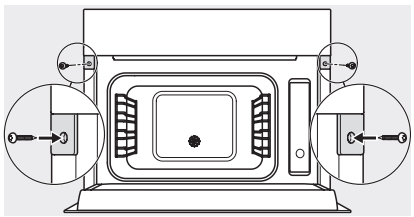

Screw joint DG DGM, installation drawing

# DGM 7440

Steam oven with microwave
for healthy cooking and rapid heating-up with networking.

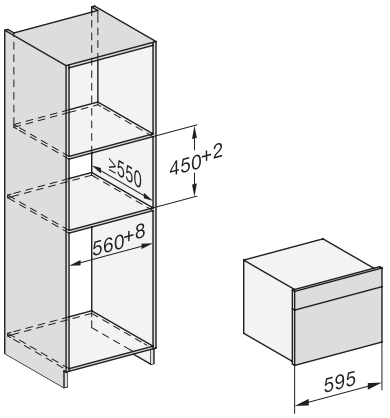


DG DGM, installation drawing

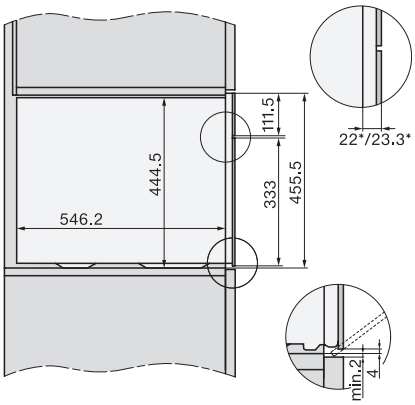


side view DG DGM, installation drawing, GB, AU

22 mm glass, 23,3 mm stainless steel

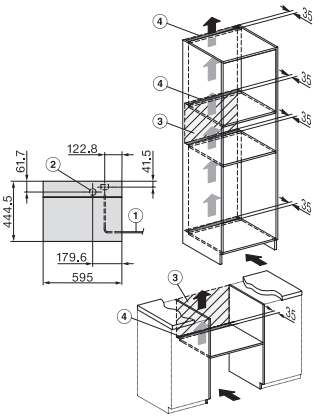


installation DGM, installation drawing, GB, AU

1) Mains connection cable, L=2000 mm, 2) Water supply hose, L=2000 mm, 3) ventilation cut-out min. 180 cm², 4) no connection in this area