TCR780WP Eco&Steam&9kg
T1 heat-pump dryer:
9 kg I M Touch I SteamCare I SilenceDrum I DryCare 40



- M Touch – simple control by tapping or swiping
- SteamCare smoothes and freshens up, saving you time during ironing
- The SilenceDrum* reduces noise for much quieter drying
- Save time sorting your laundry; DryCare 40 is perfect for a 40 °C wash**
- Complete app control of your tumble dryer with Miele@home***

* Patent EP 4 163 433

** Not suitable for woollens or silks.

*** This is a separate digital offer from Miele & Cie. KG. The range of functions can vary depending on the model and the country. Acceptance of the Terms and Conditions and Privacy Policy for Miele digital products and services in the Miele app required. Miele reserves the right to change or discontinue the digital offer at any time.

EAN: 4002516465027 / Material number: 11871890 /
Old Material Number: 12CR7802GB

General information	
Model identifier	TCR780WP Eco&Steam&9kg
Manufacturer material number	11871890
EAN number	4002516465027
Marketing class	Diamond
Construction type	
Suitable for stacking	•
Door hinging	left
Side-by-side	•
Slot-in	•
Can be built-under	•
Model	
Product brand	T1 Chrome Edition
Heat pump dryer	•
Design	
Appliance colour	Lotus white
Control panel colour	Lotus white
Control panel version	Straight
Control type	Touch control
Display	MTouch
Drying results	
PerfectDry precision drying	•
FragranceDos² fragrance system	•
Intelligent drum reversal	•
HygieneDry	•
Gentle laundry care	
SilenceDrum	•
Load in kg	9
User convenience	
Networking with Miele@home	•
Wash2Dry	•
Delay start up to 24 hours	•
Time left display	•
Time of day display	•
Programme sequence indicator	Yes
Drying assistant	•
Information text	•
Favourite programmes	•
Drum lighting	LED
MultiLingua	•
Acoustics package for the lowest sound emissions	•
Condensate container	•
Integrated condensed water drainage	•
AddLoad	•
Efficiency	
EcoFeedback	•
EcoDry technology	•

TCR780WP Eco&Steam&9kg
T1 heat-pump dryer:
9 kg I M Touch I SteamCare I SilenceDrum I DryCare 40



EAN: 4002516465027 / Material number: 11871890 /
Old Material Number: 12CR7802GB

Maintenance-free heat exchanger	•
ProfiEco motor	•
Drying programmes	
Automatic plus	•
Cottons (coloureds)	•
Cottons arrow	•
Minimum iron	•
Delicates	•
Shirts	•
Silks handcare	•
Woollens handcare	•
Express	•
Denim	•
Outerwear	•
Proofing	•
Sportswear	•
Standard pillows	•
Large pillows	•
Cottons hygiene	•
Cool air	•
Warm air	•
Basket programme	•
Pre-Ironing	•
Bed linen	•
Steam care	•
Drying extras	
Anti-crease	•
Gentle tumble	•
Freshen up	•
Buzzer	•
DryCare 40	•
DryFresh	•
PowerFresh	•
Quality	
Soft ribs	•
Safety	
PIN-Code	•
Empty out container indicator	•
Clean filter indication	•
Optical interface	•
Technical data	
Dimensions (H x W x D) in mm	850 x 596 x 636
Dimensions in mm (width)	596
Dimensions in mm (height)	850
Dimensions in mm (depth)	636
Appliance depth w/o door in mm	600
Weight in kg	62
Voltage in V	220-240

TCR780WP Eco&Steam&9kg
T1 heat-pump dryer:
9 kg I M Touch I SteamCare I SilenceDrum I DryCare 40



EAN: 4002516465027 / Material number: 11871890 /
Old Material Number: 12CR7802GB

Fuse rating in A	13
Frequency in Hz	50
Total rated load in kW	1,10
Length of supply lead in m	2,0
Contains fluorinated greenhouse gases	•
Hermetically sealed	•
Type of coolant	R134a
Refrigerant quantity in kg	0,48
Refrigerant global warming potential in CO_2 e	1430
Appliance global warming potential in CO_2 e	686,00
Replacing lamps	Service
Accessories included	
Fragrance flacon	•
Voucher for a second fragrance flacon	•
Available display languages	
Available display languages via MultiLingua	□□□□□□□, □□, □□□□, deutsch, dansk, english (AU), english (CA), english (GB), english (US), suomi, français (CA), français (FR), ελληνικά, italiano, □□□, □□□, hrvatski, bahasa malaysia, nederlands, norsk, polski, português, română, русский, svenska, srpski, slovenčina, slovenščina, español, čeština, türkçe, українська, magyar

TCR780WP Eco&Steam&9kg
T1 heat-pump dryer:
9 kg I M Touch I SteamCare I SilenceDrum I DryCare 40

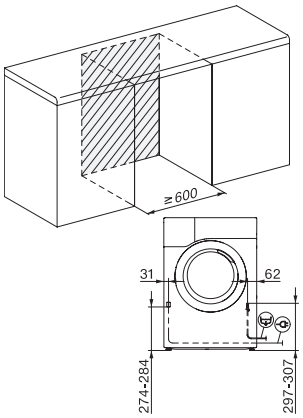

T1 installation drawing, slanted facia or straight facia, measures in mm

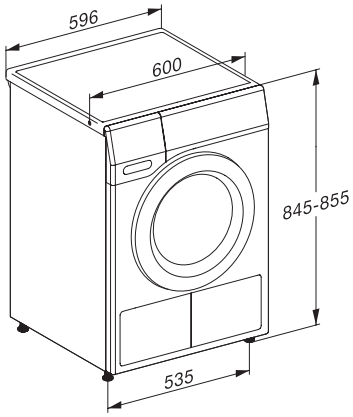

T1 drawing, slanted facia or straight facia, measures in mm

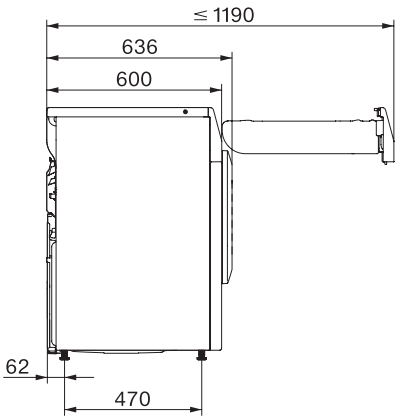

T1 drawing, slanted facia or straight facia, with porthole, measures in mm

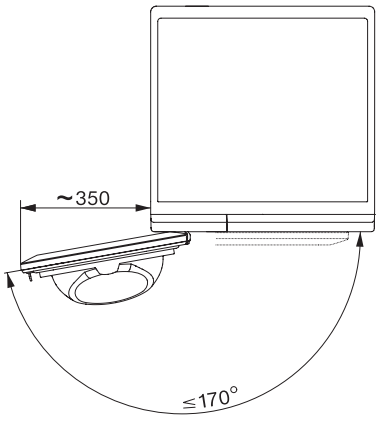

T1 drawing, slanted facia or straight facia, measures in mm