KM 7062 FR
Oven-controlled induction hob unit with flex cooking area for large cookware



EAN: 4002516719960 / Material number: 12337600 / Old Material Number: 26706210D

- Controls via rotary controls on the oven and display on the hob
- 4 cooking zones incl. 1 flex cooking area
- A width of 626 mm with stainless steel frame for surface installation
- Convenient use of large cookware items thanks to combinable Flex cooking zones

General information	
Model identifier	KM 7062 FR
Manufacturer material number	12337600
EAN number	4002516719960
Marketing class	Silver
Heating type	
Heating type	Induction
Construction type	
Combined with cooker	•
Design	
Elegant glass ceramic surface	•
Ceramic surface colour	Black
Stainless-steel frame	•
Surface-mounted installation	•
Cooking zone details	
Number of cooking zones	4
Number of cooking areas	1
Maximum number of pans	4
PowerFlex cooking zones	
No.	2
Type	Flex cooking zone
Size in mm	Ø 110-210
Max. rating in W	2100
Max. Booster power rating in W	3000
1st cooking zone/cooking area	
Position	front left
Type	Dual-circuit ring
Size in mm	Ø 90-160
Max. rating in W	1350
Max. Booster power rating in W	1850
2nd cooking zone/cooking area	
Position	rear left
Type	Dual-circuit ring
Size in mm	Ø 110-220
Max. rating in W	2300
Max. Booster power rating in W	3000
3rd cooking zone/cooking area	
Position	right
Type	Flex cooking zone
Size in mm	210x400
Max. rating in W	3000
Max. Booster power rating in W	3650
User convenience	
Pan and pan size recognition	•
Operation via sensor controls	Knob
Operation via knobs	•
Display colour	Yellow
Auto heat-up	•

KM 7062 FR
Oven-controlled induction hob unit
with flex cooking area for large cookware



EAN: 4002516719960 / Material number: 12337600 / Old Material Number: 26706210D

Keeping warm	•
Cleaning and care	
Easy to clean ceramic glass	•
Safety	
Safety switch-off	•
System lock	•
Integrated cooling fan	•
Overheating protection	•
Residual heat indicator	•
Technical data	
Dimensions (W x D) in mm	626 x 55 x 526
Dimensions in mm (width)	626
Dimensions in mm (height)	55
Dimensions in mm (depth)	526
Casing height incl. connection box in mm	48
Cutout dimensions in mm (width) with surface-mounted installation	560 mm
Cutout dimensions in mm (depth) with surface-mounted installation	490 mm
Weight in kg	11
Total rated load in kW	7,30
Voltage in V	230
Frequency in Hz	50-60
Accessories included	
Mains cable	No

KM 7062 FR

Oven-controlled induction hob unit
with flex cooking area for large cookware

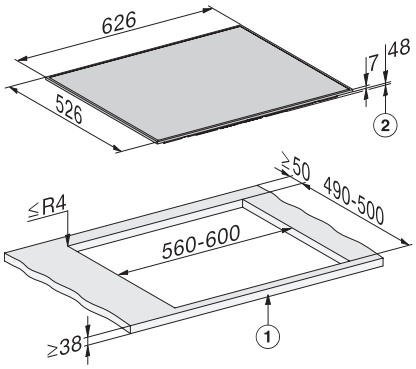

KM7061FR, KM7062FR, KM7063FR, surface mounted,
(*Fußnote) installation drawings

1) front, 2) installation height