WWG880 WCS PWash&TDos&Steam
W1 front-loader washing machine:
A -20 % I 9 kg I 1400 rpm I SteamCare I Automatic dispensing I QuickPowerWash



- Tested for 20 years of perfect laundry care*
- Save even more energy with A -20 %**
- SteamCare reduces ironing time by up to 50 % and freshens up your clothes
- Precise and automatic detergent dispensing with TwinDos®***
- QuickPowerWash ensures fast, efficient results in just 49 minutes****

* During the development phase of the W1 / W2 washing machine series, Miele tested models and core components in 5000 wash loads (= 5 wash loads per week for 50 weeks per year) in various programmes. More: miele.com/20years

** 20 % more economical than the threshold value (52) for energy efficiency class A.

*** For exclusive use with Miele UltraPhase detergent.

**** This applies to all Miele washing machines that enable the process and machine-related parameters presented in the summary of the WL 1110/18 test report to be implemented.

EAN: 4002516865650 / Material number: 12721230 /
Old Material Number: 11WG8801GB

General information	
Model identifier	WWG880 WCS PWash&TDos&Steam
Manufacturer material number	12721230
EAN number	4002516865650
Marketing class	Platinum
Construction type	
Suitable for stacking	•
Door hinging	right
Side-by-side	•
Slot-in	•
Model	
Product brand	W1 White Edition
Front-loader	•
Spinning	
Max. spin speed	1400
Rinse hold	•
Without spin function	•
Design	
Appliance colour	Lotus white
Control panel colour	Lotus white
Door design	Obsidian black with chrome ring
Rotary selector colour	Lotus White / Chrome ring
Control panel version	5° inclined
Control type	Rotary control
Display	DirectSensor white, 7 segment
Cleaning performance	
Innovative PowerWash technology	•
TwinDos automatic detergent dispensing	•
CapDosing portioned dispensing	•
Gentle laundry care	
Honeycomb drum	•
Load in kg	9
User convenience	
Networking with Miele@home	•
SteamCare steam system	•
Delay start up to 24 hours	•
Time left display	•
Programme sequence indicator	•
AutoClean detergent drawer	•
AddLoad	•
Efficiency	
Energy efficiency class (A–G)	A
More economical than the threshold value (52) for energy efficiency class A	20%
Weighted energy consumption per 100 operating cycles for the wash cycle in kWh	40

Miele

WWG880 WCS PWash&TDos&Steam
W1 front-loader washing machine:
A -20 % I 9 kg I 1400 rpm I SteamCare I Automatic dispensing I QuickPowerWash



EAN: 4002516865650 / Material number: 12721230 /
Old Material Number: 11WG8801GB

Weighted water consumption per cycle in l	50
Spin efficiency class (A–G)	B
Acoustic airborne noise emission class (spin cycle; A–D)	A
Sound emissions during spin cycle in dB(A) re 1 pW	72
Duration of the “ECO 40–60” programme at nominal capacity	229
Power rating in off mode in W	0,40
Power rating in networked standby in W	0,80
Low temperature wash "Cold" and "20 °C"	•
Automatic load control	•
Flow meter	•
Foam sensing	•
ProfiEco motor	•
Wash programmes	
QuickPowerWash	•
Cottons (coloureds)	•
Cottons with pre-wash	•
Minimum iron	•
Delicates	•
Shirts	•
Woollens (hand-washable)	•
Express 20	•
Drain / Spin	•
ECO 40-60	•
Washing extras	
Short	•
Pre-ironing with steam	•
Buzzer	•
Safety	
Water protection system	Watercontrol-System
Safety lock	•
PIN-Code	•
Optical interface	•
Technical data	
Dimensions (H x W x D) in mm	850 x 596 x 643
Dimensions in mm (width)	596
Dimensions in mm (height)	850
Dimensions in mm (depth)	643
Appliance depth in mm with opened door	1077
Weight in kg	80
Voltage in V	220-240
Fuse rating in A	13
Frequency in Hz	50
Total rated load in kW	2,10-2,40
Length of water inlet hose in m	1,60
Length of water drain hose in m	1,50
Length of supply lead in m	2
Accessories included	
3 Caps	•

WWG880 WCS PWash&TDos&Steam
W1 front-loader washing machine:
A -20 % I 9 kg I 1400 rpm I SteamCare I Automatic dispensing I QuickPowerWash



EAN: 4002516865650 / Material number: 12721230 /
Old Material Number: 11WG8801GB

UltraPhase 1 + 2	•
Voucher for 5 Miele UltraPhase cartridges	•

WWG880 WCS PWash&TDos&Steam
W1 front-loader washing machine:
A -20 % I 9 kg I 1400 rpm I SteamCare I Automatic dispensing I QuickPowerWash

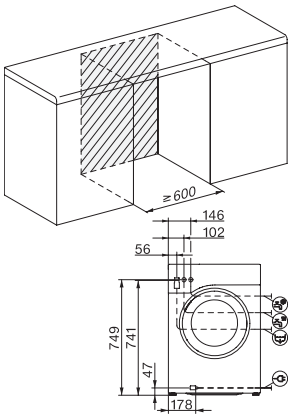

W1 drawing, facia 5 degree, measures in mm

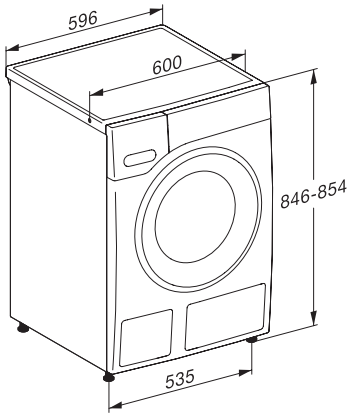

W1 drawing, facia 5 degree, measures in mm

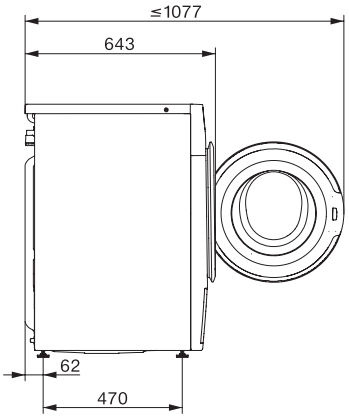

W1 drawing, facia 5 degree, measures in mm

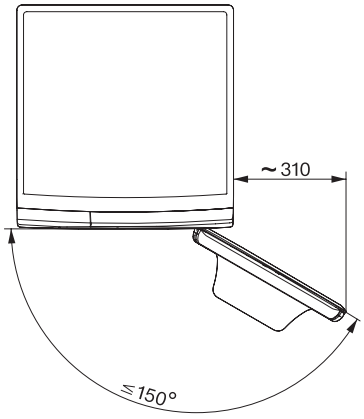

W1 drawing, facia 5 degree, measures in mm