H 7440 B
Compact oven
seamless design with LED lighting and PerfectClean.



- Large clear text display with sensor controls – DirectSensor
- Particularly easy to clean – PerfectClean finish
- Especially light dough and nicely browned crusts – Moisture plus
- Ensures your food won't overcook – TasteControl
- Network-enabled WiFi appliance – Miele@home

EAN: 4002516132592 / Material number: 11104310 / Old Material Number: 22744044D

General information	
Model identifier	H 7440 B
Manufacturer material number	11104310
EAN number	4002516132592
Marketing class	Gold
Construction type and design	
PureLine	•
Construction type and design	
Built-in oven	•
Colour	Stainless steel/Clean Steel
Convenience features	
TasteControl	•
Rapid heat-up	•
Pre-heating	•
Keeping warm	•
Crisp function	•
Operating modes	
Defrosting	•
Auto roast	•
Moisture plus with Auto roast	•
Fan plus	•
Moisture plus with Fan plus	•
Intensive bake	•
Moisture plus with Intensive bake	•
Moisture plus	•
Moisture plus with Conventional heat	•
Conventional heat	•
Bottom heat	•
Fan grill	•
Grill	•
Eco hot air	•
Automatic programmes	•
Country-specific automatic programmes	•
User convenience	
Networking with Miele@home	•
Display	DirectSensor
SoftOpen	•
SoftClose	•
MultiLingua	•
Programmable timed steam injection	•
Time of day display	•
Clock synchronisation	•
Date display	•
Minute minder	•
Programmable start of cooking duration	•
Programmable end of cooking duration	•
Programmable cooking duration	•
Actual temperature display	•

Miele

H 7440 B
Compact oven
seamless design with LED lighting and PerfectClean.



EAN: 4002516132592 / Material number: 11104310 / Old Material Number: 22744044D

Target temperature display	•
Buzzer when desired temperature is reached	•
Recommended temperature	•
User programmes	•
Individual settings	•
Efficiency	
Energy efficiency class (A+++ – D)	A++
Automatic residual heat utilisation	•
Power rating in off mode in W	0,3
Power rating in standby mode in W	0,8
Power rating in networked standby in W	2,0
Time until automatic switch to standby in min	20
Time until automatic switch to networked standby in min	20
Time until automatic switch to off mode in min	20
Cleaning and care	
Stainless steel/CleanSteel finish	•
Oven compartment with PerfectClean and catalytically enamelled liners	•
Hinged grill element	•
CleanGlass door	•
Steam techn./water supply	
Steam generator power in kW	1,10
Fresh water container volume in l	0,3
Suction tube for drawing in water	•
Safety	
Appliance cooling system and touch-cool front	•
Safety switch-off	•
System lock	•
Sensor lock	•
Technical data	
Oven compartment volume in l	49
No. of shelf levels	3
Numbered shelf levels	•
Oven light	1 LED spot
Plug type	Schuko plug with earth
Niche width min. in mm	560
Niche width max. in mm	568
Niche height min. in mm	450
Niche height max. in mm	452
Niche depth in mm	550
Weight in kg	35,0
Total rated load in kW	3,20
Length of supply lead in m	1,50
Voltage in V	220-240
Frequency in Hz	50
Fuse rating in A	16
Number of phases	1
Mains cable with plug	•
Replacing lamps	Service

H 7440 B
Compact oven
seamless design with LED lighting and PerfectClean.



EAN: 4002516132592 / Material number: 11104310 / Old Material Number: 22744044D

Accessories included	
Baking tray with PerfectClean HBB 71	1
Universal tray with PerfectClean HUBB 71	1
Baking and roasting rack with PerfectClean	1
FlexiClip runners with PerfectClean HFC 71	1
Removable PerfectClean side runners (pair)	1
Descaling tablets	2
Available display languages	
Available display languages via MultiLingua	□□□□□□□, □□, □□□, deutsch, dansk, english, suomi, français, ελληνικά, italiano, □□□, □□□, hrvatski, bahasa malaysia, nederlands, norsk, polski, português, română, русский, svenska, srpski, slovenčina, slovenščina, español, čeština, türkçe, українська, magyar

H 7440 B
Compact oven
seamless design with LED lighting and PerfectClean.

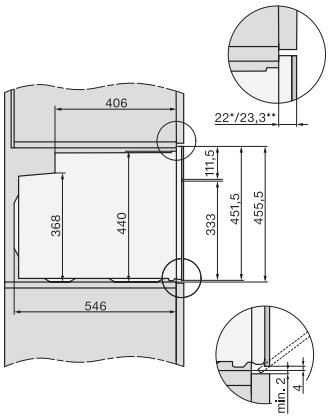

side view H7000 M, installation drawings

22 mm – glass, 23,3 mm – metal

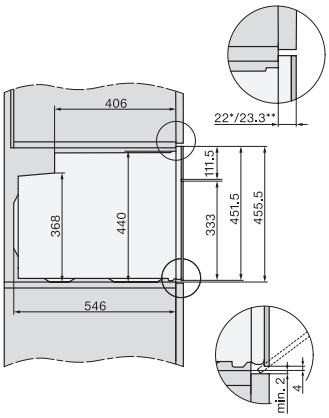

side view H7000 M, installation drawings, GB, AU

22 mm – glass, 23,3 mm – metal

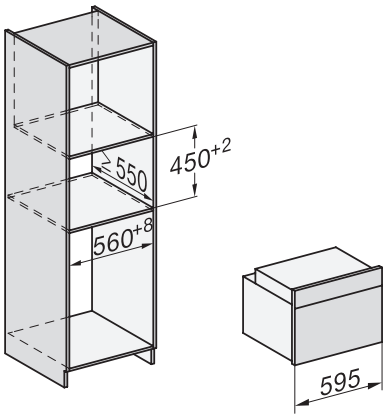

built-in H7000 M, installation drawing

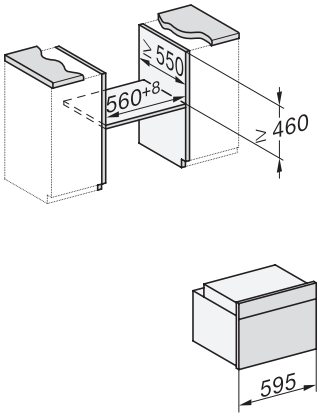

built-in H7000 M build-under, installation drawing

If the oven is to be installed under a hob, follow the instructions for installing the hob and the height of the hob.

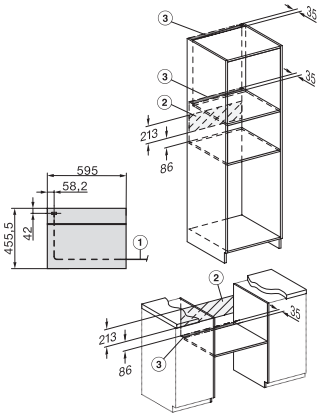

Installation H7000 M, installation drawing

1) Mains connection cable, L=1500 mm, 2) No connection in this area, 3) Lüftungsausschnitt min. 150 cm²

H2840B, H7244B, H7440B, installation drawings

1) Mains connection cable, L=2000 mm, 2) No connection in this area, 3) Lüftungsausschnitt min. 150 cm²

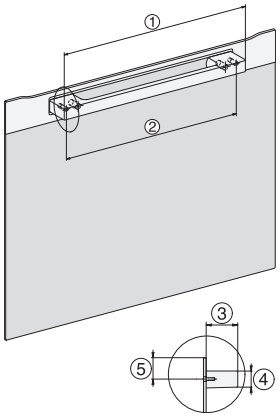

H7000 handle, installation drawing

1) 400 mm, 2) 360 mm, 3) 47 mm, 4) 24 mm, 5) 32.5 mm

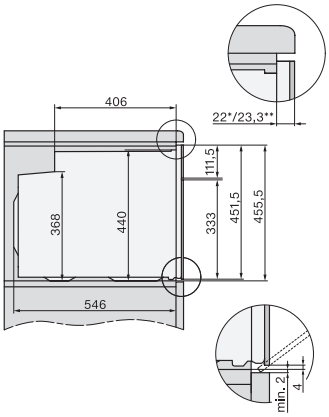

side view H7000 M build-under, installation drawings

22 mm – glass, 23,3 mm – metal