CSDA 7001 FL
SmartLine element
as downdraft extractor for extraction or recirculation operation



EAN: 4002516305927 / Material number: 11402300 / Old Material Number: 27700150D

- Intuitive quick selection via number sequences – Smart Select
- Elegant design – for flush or raised installation
- Seamlessly integrates with any SmartLine element
- Efficient filtration- 10-ply stainless-steel grease filter
- Energy-efficient and quiet – powerful ECO motor

General information	
Model identifier	CSDA 7001 FL
Manufacturer material number	11402300
EAN number	4002516305927
Construction type	
Downdraft extractor	•
Operating modes	
Type of air guide	Can be retrofitted
Flat ducting components (order separately)	DFK- xxxx
Recirculation conversion kit (order separately)	DUU 1000-2
Design	
Frameless – surface-mounted	•
Flush	•
User convenience	
Operation via sensor controls	SmartSelect
Digital power level display	•
Run-on time 5 min.	•
Display colour	Yellow
Easy-to-clean canopy interior – CleanCover	•
Efficiency	
Energy efficiency class (A+++ – D)	A++
ECO motor	•
Annual energy consumption in kWh/year	25,3
Fluid dynamic efficiency class	A
Lighting efficiency class	NA
Grease filtering efficiency class	B
Cleaning and care	
Easy to clean ceramic glass	•
Filter system	
Number of dishwasher-safe stainless steel grease filters (10-ply)	1
Exhaust air	
Air throughput in Level 1 (m^3/h) according to EN 61591	150
Air throughput in Level 2 (m^3/h) according to EN 61591	290
Air throughput in Level 3 (m^3/h) according to EN 61591	440
Air throughput in Booster level 1 (m^3/h) according to EN 61591	560
Sound power in Level 2 (dB(A) re 1 pW) according to EN 60704-3	58,0
Sound power in Booster level 1 (dB(A) re 1 pW) acc. to EN 60704-3	69,0
Sound pressure in Level 1 (dB(A) re 20 µPa) according to EN 60704-2-13	29,0
Sound pressure in Level 2 (dB(A) re 20 µPa) according to EN 60704-2-13	43,0
Sound pressure in Level 3 (dB(A) re 20 µPa) according to EN 60704-2-13	51,0
Sound pressure in Booster level 1 (dB(A) re 20 µPa) acc. to EN 60704-2-13	55,0

CSDA 7001 FL
SmartLine element
as downdraft extractor for extraction or recirculation operation



EAN: 4002516305927 / Material number: 11402300 / Old Material Number: 27700150D

Recirculation	
Air throughput in Level 1 (m^3/h) according to EN 61591	100
Air throughput in Level 2 (m^3/h) according to EN 61591	235
Air throughput in Level 3 (m^3/h) according to EN 61591	380
Air throughput in Booster level 1 (m^3/h) according to EN 61591	460
Sound power in Level 1 (dB(A) re 1 pW) according to EN 60704-3	49,0
Sound power in Level 2 (dB(A) re 1 pW) according to EN 60704-3	63,0
Sound power in Level 3 (dB(A) re 1 pW) according to EN 60704-3	73,0
Sound power in Booster level 1 (dB(A) re 1 pW) acc. to EN 60704-3	78,0
Sound pressure in Level 1 (dB(A) re 20 µPa) according to EN 60704-2-13	34,0
Sound pressure in Level 2 (dB(A) re 20 µPa) according to EN 60704-2-13	49,0
Sound pressure in Level 3 (dB(A) re 20 µPa) according to EN 60704-2-13	58,0
Sound pressure in Booster level 1 (dB(A) re 20 µPa) acc. to EN 60704-2-13	63,0
Safety	
Safety switch-off	•
FlameGuard	•
Technical data	
Dimensions in mm (width)	120
Dimensions in mm (height)	168
Dimensions in mm (depth)	520
Casing height incl. connection box in mm	168
Cutout dimensions in mm (width) with surface-mounted installation	100 mm
Cutout dimensions in mm (depth) with surface-mounted installation	500 mm
Inner cut-out dimensions in mm (width) with flush installation	100
Inner cut-out dimensions in mm (depth) with flush installation	500
Weight in kg	11
Outer cut-out dimensions in mm (width) with flush installation	124
Outer cut-out dimensions in mm (depth) with flush installation	524
Total rated load in kW	0,17
Voltage in V	230
Fuse rating in A	10
Number of phases	1
Length of supply lead in m	2
Installation notes	
Plinth fan with vent connection	•
Extraction connection at rear and side	•

CSDA 7001 FL
SmartLine element
as downdraft extractor for extraction or recirculation operation



EAN: 4002516305927 / Material number: 11402300 / Old Material Number: 27700150D

Dimensions of the exhaust ducting connector in mm	222
Dimensions of the exhaust ducting connector in mm	89
Accessories included	
Ducting system to the plinth fan	•

CSDA 7001 FL
SmartLine element
as downdraft extractor for extraction or recirculation operation

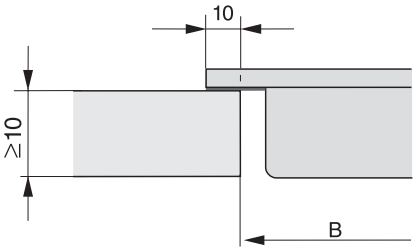

CS 7000 FL (Installation drawing)

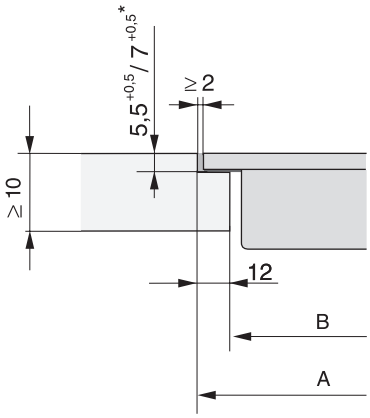

CS 7000 FL, flush (Installation drawing)

*7+0,5 = CS7611 (Wok)

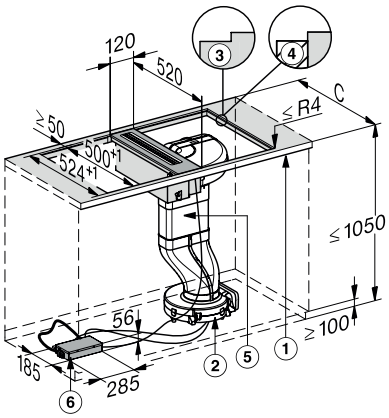

CSDA 7001 - flush (Installation drawing)

1) front, 2) Fan (in the plinth lying on the floor), 3) Stepped cut-out, 4) 12 mm wooden panel (not supplied as standard), 5) Air duct, 6) E-box

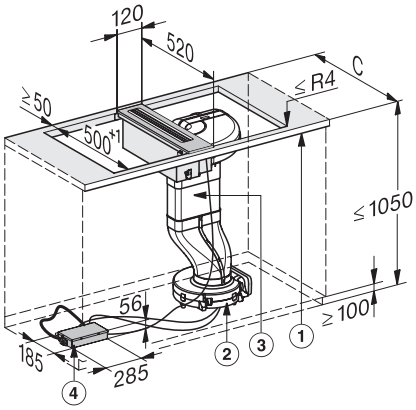

CSDA 7001 - supported installation (Skizze)

1) front, 2) Fan (in the plinth lying on the floor), 3) Air duct, 4) E-Box,

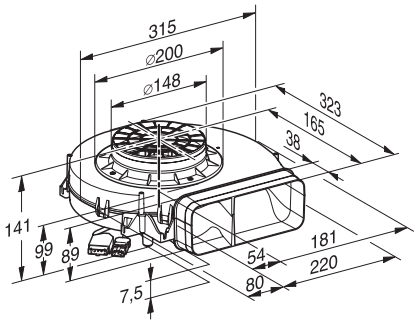

Plinth blower for CSDA 7001 (Installation drawing)