K 2902 Vi
MasterCool refrigerator
For high-end design and technology on a large scale.



- Push2open for convenient door-opening assistance
- Food stays fresh for up to 3 x longer thanks to MasterFresh
- Light floods the interior thanks to LED elements – BrilliantLight
- Convenient control thanks to colour touch display MasterSensor

EAN: 4002516323211 / Material number: 11503740 /
Old Material Number: 36290201EU1

General information	
Model identifier	K 2902 Vi
Manufacturer material number	11503740
EAN number	4002516323211
Marketing class	Diamond
Appliance category	
Refrigerator	•
Construction type	
Built-in appliance	•
Integrated appliance	•
Door hinge	right
Convertible door hinging	•
Side-by-side enabled	•
Design	
Lighting	BrilliantLight
User convenience	
Networking with Miele@home	•
Operating concept	MasterSensor
SuperCool	•
Sabbath mode	•
Freshness system	MasterFresh
DynaCool	•
SoftClose	•
SelfClose	•
Push2open	•
FullAccess	•
EasyClean	•
MaxLoad hinge	•
Control system	
No. of temperature zones	2
Eco mode	•
Fridge/Fridge section	
Height-adjustable, full-width tempered glass shelves	2
Number of VeggieBoxes	1
No. of crisper drawers	2
SlidingShelf	•
Door rack for bottles	3
Efficiency	
Energy efficiency class (A–G)	E
Annual energy consumption in kWh	181,77
Energy consumption in 24 h in kWh	0,49
Safety	
Lock function	•
Spill-proof glass shelves	•
Acoustic door alarm	•
Acoustic temperature alarm	•
Optical door alarm	•
Optical temperature alarm	•

K 2902 Vi
MasterCool refrigerator
For high-end design and technology on a large scale.



EAN: 4002516323211 / Material number: 11503740 /
Old Material Number: 36290201EU1

Technical data	
Niche width in mm min.	914
Niche width in mm max.	918
Niche height in mm min.	2134
Niche height in mm max.	2164
Niche depth in mm	629
Appliance width in mm	908
Appliance height in mm	2127
Appliance depth in mm	610
Weight in kg	171,0
Door hinge technology	Fixed door
Max. door front weight – refrigerator, in kg	48
Climate range	SN-T
Refrigerator compartment in l	579
including PerfectFresh zone in l	85
Total usable capacity in l	579
Acoustic airborne noise emission class (A–D)	C
Sound emissions in dB(A) re 1 pW	40
Current consumption (mA)	3000
Voltage in V	220-240
Fuse rating in A	10
Number of phases	1
Frequency in Hz	50-60
Length of supply lead in m	3,0
Replacing lamps	Service
Accessories included	
Active AirClean filter	•
Water filter	Nein
Available display languages	
Available display languages via MultiLingua	□□□□□□□, □□, □□□□, deutsch, dansk, english, english (AU), english (CA), english (GB), english (US), eesti, suomi, français, français (CA), français (FR), ελληνικά, italiano, □□□, □□□, hrvatski, latviesu, lietuviu, bahasa malaysia, nederlands, norsk, polski, português, română, русский, svenska, srpski, slovenčina, slovenščina, español, čeština, türkçe, українська, magyar

K 2902 Vi
MasterCool refrigerator
For high-end design and technology on a large scale.

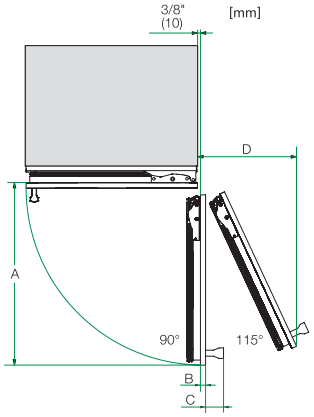

Opening angel 90°/115°, right side stop, MasterCool (Sketch) *footnote

A) Appliance door width, K 2601 Vi, K 2601 SF, KWT 2601 Vi, KWT 2601 SF, KWT 2661 ViS, KWT 2661 SFS: 677 mm (26 2/3 , inch);, K 2602 Vi, K 2602 SF, KWT 2602 Vi, KWT 2602 SF, KWT 2662 ViS, KWT 2662 SFS: 677 mm (26 2/3 , inch);, K 2801 Vi, K 2801 SF, KF 2801 Vi, KF 2801 SF: 829 mm (32 2/3 inch);, K 2802 Vi, K 2802 SF, KF 2802 Vi, KF 2802 SF: 829 mm (32 2/3 inch);, K 2901 Vi, K 2901 SF, KF 2901 Vi, KF 2901 SF: 982 mm (38 2/3 inch);, K 2902 Vi, K 2902 SF, KF 2902 Vi, KF 2902 SF: 982 mm (38 2/3 inch);, B) Furniture front (max. 38 mm) (1 1/2 inch), C) Door handle, D) Distance door to wall (without furniture front and door handle): , K 2601 Vi, K 2601 SF, KWT 2601 Vi, KWT 2601 SF, KWT 2661 ViS, KWT 2661 SFS: 296 mm (11 2/3 , inch);, K 2602 Vi, K 2602 SF, KWT 2602 Vi, KWT 2602 SF, KWT 2662 ViS, KWT 2662 SFS: 296 mm (11 2/3 , inch);, K 2801 Vi, K 2801 SF, KF 2801 Vi, KF 2801 SF: 363 mm (14 1/3 inch);, K 2802 Vi, K 2802 SF, KF 2802 Vi, KF 2802 SF: 363 mm (14 1/3 inch), K 2901 Vi, K 2901 SF, KF 2901 Vi, KF 2901 SF: 428 mm (16 7/8 inch), K 2902 Vi, K 2902 SF, KF 2902 Vi, KF 2902 SF: 428 mm (16 7/8 inch), E) ONLY valid for SF versions: A + 25 mm (1 inch)

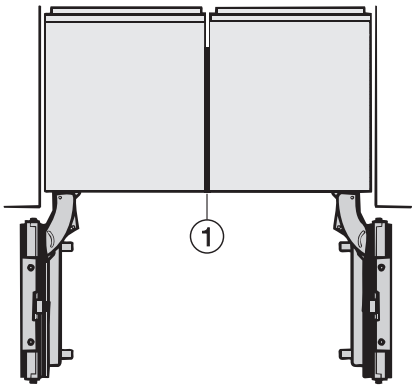

Side-by-side, MasterCool, without partition wall, with heating mat (Sketch) (with footnote)

1) Heating mat KSK 2001 (EU, AUS, CN) or KSK 2002 (US, CA, MX, BR)

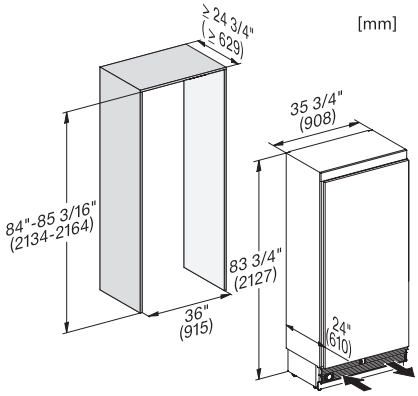

K2902Vi, K2912Vi, F2902Vi, F2912Vi, K2901Vi, K2911Vi, F2901Vi, F2911Vi, inner space, MasterCool, installation drawings

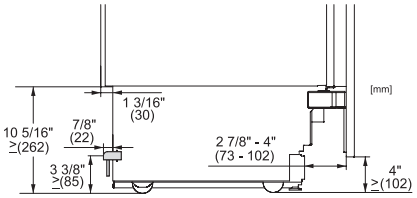

Sideview, MasterCool, Sketch

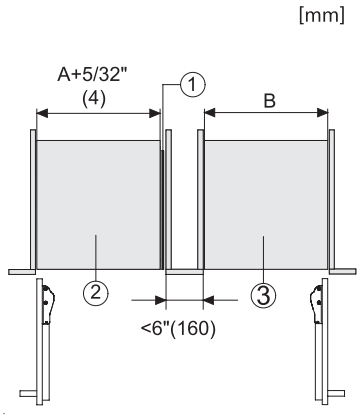

Side-by-Side, MasterCool, footnote, installation drawings

1. KSK 2001/2002, 2. Device A, 3. Device B, A = niche device A, B = niche device B

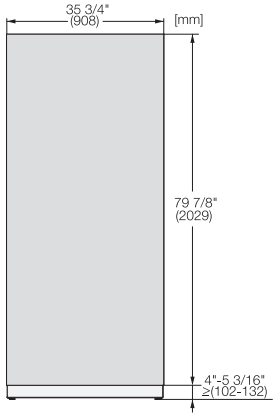

KFP3605ed/cs, KFP3604ed/cs, Front panel, Fron dimensions, MasterCool, installation drawings

K 2902 Vi

MasterCool refrigerator

For high-end design and technology on a large scale.

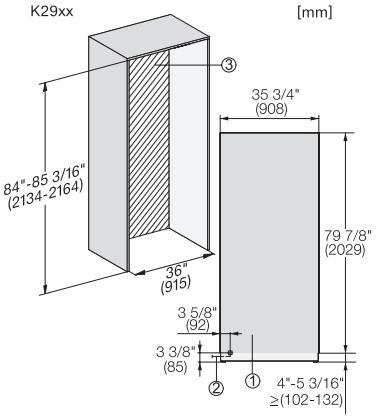

K2902Vi, K2902SF, K2912Vi, K2912SF, installation, MasterCool, *footnote, installation drawings

1. Vew from the front, 2. Mains connection cable, L = 3000 mm (118 inch), 3. No water/ELT connections permitted in this area