DAD 6980 Levantar Ambient
Downdraft extractor
936 mm | 450 m3/h | 62.0 dB(a) | Touch | Con@ctivity | AmbientLight | ECO motor



EAN: 4002516975106 / Material number: 12963350 /
Old Material Number: 28D6980BGB

- Easy recirculation mode installation with plug&play accessory set
- Motorised retractable deflector plate – Hood in Motion
- Control via hob – operate fan and lighting directly from the hob
- AmbientLight# – individual, coloured lighting for an inviting atmosphere
- Efficient filtration- 10-ply stainless-steel grease filter

DAD 6980 Levantar Ambient
Downdraft extractor
936 mm | 450 m3/h | 62.0 dB(a) | Touch | Con@ctivity | AmbientLight | ECO motor

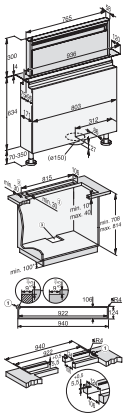

DAD4970, DAD6980, Installation drawings

1. Stepped cutout for flush-fit installation in stone worktops (granite, marble)., 2. Ensure that materials are sufficiently stable., 3. Cut-out off-centre., Exhaust duct Ø 150 mm., *Only required when flat ducting is laid under cabinets or the DUU 600 recirculation box is used.

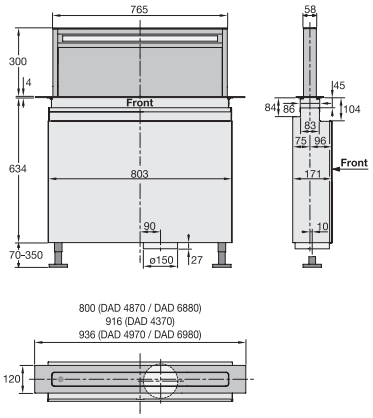

DAD4370, DAD4870, DAD4970, DAD6880, DAD6980, Installation drawings

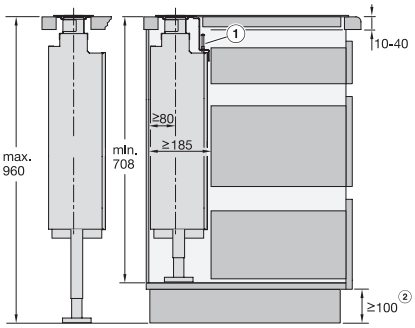

DAD4370, DAD4870, DAD4970, DAD6880, DAD6980, Installation drawings

1. If you install the extractor hood and hob flush with each other in a shared cut-out, you must use the angle strip provided., 2. The minimum dimension is required if flat ducts are installed under the cabinets or if the DUU 600 recirculation box is used.

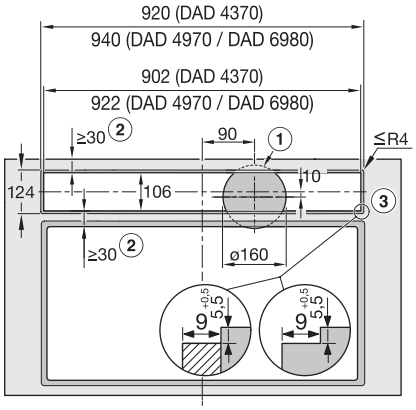

DAD4370, DAD4970, DAD6980, flush, Installation drawings

Installation of the downdraft hood and cooktop in separate cutouts., Flush installation., 1. Cut-out for exhaust air duct in the cabinet base., 2. Ensure sufficient stability of the worktop., 3. Step milling for flush mounting in a countertop. Note the, the different milling widths for the hob and the downdraft. Instead of a step milling, a wooden strip offset 5.5 mm downwards can be installed as an alternative (not included in the scope of delivery)., , Exhaust air connection ø 150 mm.

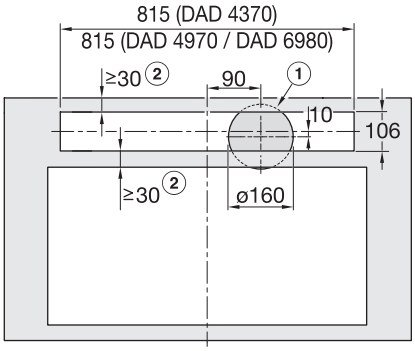

DAD4370, DAD4970, DAD6980, overlying, Installation drawings

Installation of the downdraft hood and cooktop in separate cutouts., Surface-mounted installation, 1. Cutout for exhaust air line in cabinet base., 2. Ensure sufficient stability of the worktop., Exhaust air connection ø150 mm

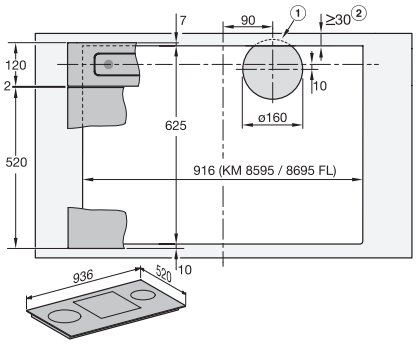

DAD4970, DAD6980, surface mounted installation, common cutout, Installation drawings

Side-by-side installation of the downdraft hood and the cooktop in a common cutout., Example: combination with KM 8595 FL or KM 8695 FL., Surface-mounted installation, 1. Cut-out for exhaust air line in cabinet base., 2. Ensure sufficient stability of the worktop., , Exhaust air connection ø150 mm.

DAD 6980 Levantar Ambient
Downdraft extractor
936 mm | 450 m3/h | 62.0 dB(a) | Touch | Con@ctivity | AmbientLight | ECO motor

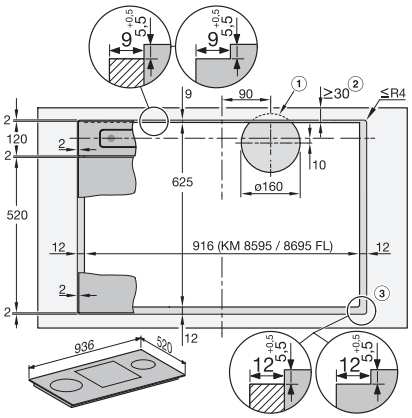

DAD4970, DAD6980, flush, Installation drawings

Side-by-side installation of the downdraft hood and the cooktop in a common cutout., Example: combination with KM 8595 FL or KM 8695 FL., Flush installation, 1. Cut-out for exhaust air duct in the cabinet base., 2. Ensure sufficient stability of the worktop., 3. Step milling for flush mounting in a worktop. Note the, the different milling widths for the hob and the downdraft. , Instead of a step milling, a 5.5 mm downwardly offset wooden strip can be installed (not included in the scope of delivery)., , Exhaust air connection ø 150 mm.