M 7240 TC

Built-in microwave oven

in a design that is the perfect complement with controls on the top.



- Clear-text display with sensor controls – DirectSensor S
- Perfect defrosting and cooking – Automatic programmes
- Plenty of room – 46 l oven compartment volume and 40 cm turntable
- Very powerful microwave – 900 W
- Popcorn at the touch of a button – Popcorn button

EAN: 4002516103356 / Material number: 11093950 /
Old Material Number: 24724040GB

General information	
Model identifier	M 7240 TC
Manufacturer material number	11093950
EAN number	4002516103356
Marketing class	Gold
Construction type and design	
PureLine	•
TopControl	•
Construction type and design	
Built-in microwave oven	•
Colour	Stainless steel/Clean Steel
Convenience features	
Keeping warm	•
Operating modes	
Microwave	•
Automatic programmes	•
User convenience	
Display	DirectSensor S
SoftOpen	•
SoftClose	•
MultiLingua	•
Popcorn function	•
Time of day display	•
Minute minder	•
Programmable end of cooking duration	•
Programmable cooking duration	•
Quick microwave	•
Individual settings	•
Efficiency	
Night dimming	•
Power rating in off mode in W	0,3
Power rating in standby mode in W	0,8
Time until automatic switch to standby in min	20
Time until automatic switch to off mode in min	20
Cleaning and care	
Stainless steel/CleanSteel finish	•
Stainless steel oven compartment	•
CleanGlass door	•
Safety	
System lock	•
Safety switch-off	•
Safety lock "Door" warning	•
Technical data	
Oven compartment volume in l	46
Door hinge	Bottom
Oven light	1 LED spot
Turntable diameter in cm	40,6
Oven interior height in cm	23,2

M 7240 TC
Built-in microwave oven
in a design that is the perfect complement with controls on the top.



EAN: 4002516103356 / Material number: 11093950 /
Old Material Number: 24724040GB

Plug type	GB three-pin plug
Electronically controlled microwave power	•
Microwave power levels in W	80 /150 /300 /450 /600 /750 /900
Maximum microwave power in W	900
Niche width min. in mm	562
Niche width max. in mm	568
Niche-independent venting	•
Niche height min. in mm	450
Niche height max. in mm	452
Niche depth in mm	550
Appliance dimensions (W x H x D) in mm	595 x 456 x 560
Weight in kg	28,3
Total rated load in kW	1,6
Length of supply lead in m	2,10
Voltage in V	220-240
Frequency in Hz	50
Fuse rating in A	13
Number of phases	1
Mains cable with plug	•
Replacing lamps	Service
Accessories included	
Turntable	1
Available display languages	
Available display languages via MultiLingua	□□□□□□□, □□, □□□□, deutsch, dansk, english, suomi, français, ελληνικά, italiano, □□□, □□□, hrvatski, bahasa malaysia, nederlands, norsk, polski, português, română, русский, svenska, srpski, slovenčina, slovenščina, español, čeština, türkçe, українська, magyar

M 7240 TC

Built-in microwave oven

in a design that is the perfect complement with controls on the top.

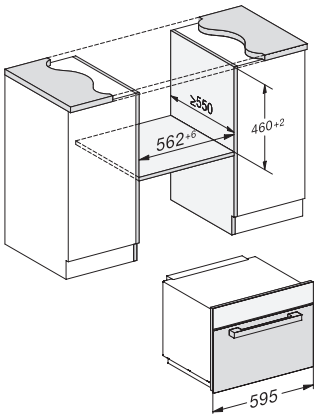

M7140TC, M724x, installation drawings

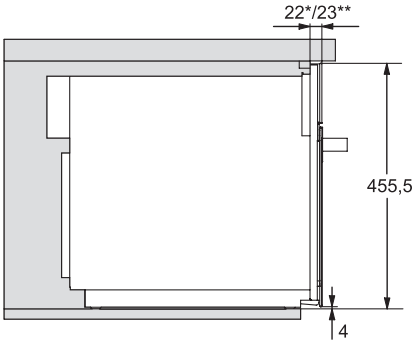

M7140TC, M724xTC, installation drawing

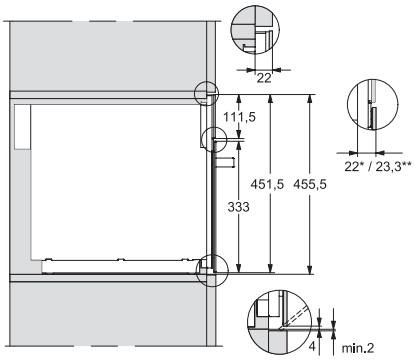

M7140TC, M724xTC, installation drawing

22 mm – glass, 23.3 mm – stainless steel

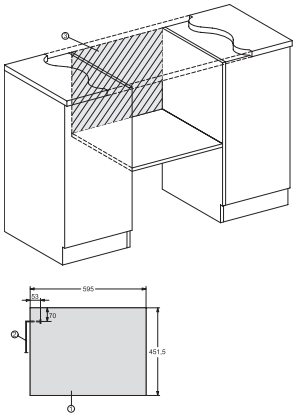

M7140TC, M724x, installation drawings

1) Front view, 2) Mains connection cable L=1,600 mm, 3) No connection in this area

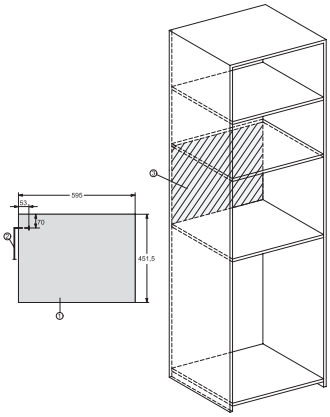

M7140TC, M724x, installation drawings

1) Front view, 2) Mains connection cable L=1,600 mm, 3) No connection in this area

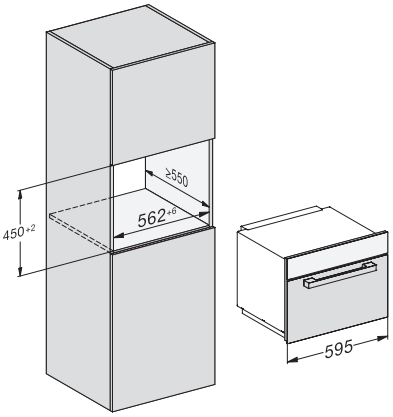

M7140TC, M724x, installation drawings