DA 1260
Built-under cooker hood
with energy-efficient LED lighting and sliding switch for simple operation.



- Puristic design – space-saving solution 598 mm wide
- Powerful – 545 m3/h in Booster level
- Efficient filtration- 10-ply stainless-steel grease filter
- Safe and easy to clean – Miele CleanCover
- Suitable for every home – for extraction or recirculation

EAN: 4002515792186 / Material number: 10568360 /
Old Material Number: 28126055GB

General information	
Model identifier	DA 1260
Manufacturer material number	10568360
EAN number	4002515792186
Marketing class	Silver
Construction type	
Built-under hood	•
Construction type and design	
Colour	Stainless steel
Operating modes	
Type of air guide	Can be retrofitted
Active charcoal filter (order separately)	DKF 18-P
User convenience	
Mechanical controls	•
Controls	Slide switch
Power levels (number without Booster level)	3
Booster levels	1
Easy-to-clean canopy interior – CleanCover	•
Efficiency	
Energy efficiency class (A+++ – D)	C
Annual energy consumption in kWh/year	91,6
Fluid dynamic efficiency class	D
Lighting efficiency class	A
Grease filtering efficiency class	A
Filter system	
Number of dishwasher-safe stainless steel grease filters (10-ply)	2
Lighting	
Number x W	2 x 3 W
Light intensity in Lx	330 lx
Colour temperature in K	3000 Kelvin
Fan	
Single-action blower	•
Exhaust air	
Air throughput in Level 1 (m^3/h) according to EN 61591	275
Air throughput in Level 2 (m^3/h) according to EN 61591	315
Air throughput in Level 3 (m^3/h) according to EN 61591	355
Air throughput in Booster level 1 (m^3/h) according to EN 61591	545
Sound power in Level 1 (dB(A) re 1 pW) according to EN 60704-3	57,0
Sound power in Level 2 (dB(A) re 1 pW) according to EN 60704-3	60,0
Sound power in Level 3 (dB(A) re 1 pW) according to EN 60704-3	64,0
Sound power in Booster level 1 (dB(A) re 1 pW) acc. to EN 60704-3	74,0
Sound pressure in Level 1 (dB(A) re 20 µPa) according to EN 60704-2-13	43,0

DA 1260
Built-under cooker hood
with energy-efficient LED lighting and sliding switch for simple operation.



EAN: 4002515792186 / Material number: 10568360 /
Old Material Number: 28126055GB

Sound pressure in Level 2 (dB(A) re 20 µPa) according to EN 60704-2-13	47,0
Sound pressure in Level 3 (dB(A) re 20 µPa) according to EN 60704-2-13	50,0
Sound pressure in Booster level 1 (dB(A) re 20 µPa) acc. to EN 60704-2-13	60,0
Recirculation	
Air throughput in Level 1 (m^3/h) according to EN 61591	165
Air throughput in Level 2 (m^3/h) according to EN 61591	180
Air throughput in Level 3 (m^3/h) according to EN 61591	195
Air throughput in Booster level 1 (m^3/h) according to EN 61591	220
Sound power in Level 1 (dB(A) re 1 pW) according to EN 60704-3	71,0
Sound power in Level 2 (dB(A) re 1 pW) according to EN 60704-3	72,0
Sound power in Level 3 (dB(A) re 1 pW) according to EN 60704-3	73,0
Sound power in Booster level 1 (dB(A) re 1 pW) acc. to EN 60704-3	75,0
Sound pressure in Level 1 (dB(A) re 20 µPa) according to EN 60704-2-13	57,0
Sound pressure in Level 2 (dB(A) re 20 µPa) according to EN 60704-2-13	58,0
Sound pressure in Level 3 (dB(A) re 20 µPa) according to EN 60704-2-13	59,0
Sound pressure in Booster level 1 (dB(A) re 20 µPa) acc. to EN 60704-2-13	62,0
Technical data	
Canopy width in mm	598
Canopy height in mm	125
Canopy depth in mm	500
Net weight in kg	11,2
Length of supply lead in m	1,5
Standard plug fitted	•
Minimum height above electric hobs in mm	450
Minimum safety distance above gas hobs (max. 12.6 kW total power, burner ≤ 4.5 kW) in mm	650
Number of phases	1
Total rated load in kW	0,23
Voltage in V	230
Fuse rating in A	10
Frequency in Hz	50
Installation notes	
Extraction ducting connection at top	•
Diameter of exhaust duct in mm	150
Fitting template	•
Accessories included	
Non-return flap	•
Deflector for recirculation	•

DA 1260
Built-under cooker hood
with energy-efficient LED lighting and sliding switch for simple operation.



EAN: 4002515792186 / Material number: 10568360 /
Old Material Number: 28126055GB

- Adapter to reduce ducting diameter from 150 mm to 125 mm Ø

DA 1260
Built-under cooker hood
with energy-efficient LED lighting and sliding switch for simple operation.

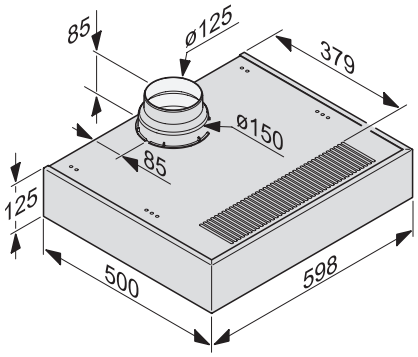

DA 1060, DA 1160, DA 1260 (Installation drawing)