KWTUS 7054 F

Built-under wine conditioning unit, 82–88 cm niche height
with FlexiFrame, ActiveHumidity and NoteBoard in a compact design.



- Storage of all bottle sizes/shapes thanks to FlexiFrame
- Perfect regulation of humidity with ActiveHumidity
- Writing on the wooden shelves on the NoteBoard
- UV-resistant insulated glass perfectly protects your wine
- Presented in perfect light – LED lighting

EAN: 4002516848752 / Material number: 12690500 /
Old Material Number: 39705410AUS

| | |
|---|---|
| **General information** | |
| Model identifier | KWTUS 7054 F |
| Manufacturer material number | 12690500 |
| EAN number | 4002516848752 |
| Marketing class | Gold |
| **Appliance category** | |
| Wine conditioning unit | • |
| **Construction type** | |
| Built-in appliance | • |
| Integrated appliance | • |
| Undercounter appliance | • |
| Door hinge | right |
| Convertible door hinging | • |
| Side-by-side enabled | • |
| **Design** | |
| Casing colour | black |
| Front colour | Obsidian Black glass |
| Wine compartment lighting | continuously dimmable LED |
| **User convenience** | |
| Networking with Miele@home | • |
| Door opening aid | FrontOpen |
| DynaCool | • |
| ActiveHumidity | • |
| Total number of shelves | 4 |
| Number of shelves | 4 |
| Shelf material | Beechwood |
| Number of FlexiFrame racks | 3 |
| Number of shelves for crosswise storage | 1 |
| SelfClose FlexiFrame | • |
| NoteBoard | Yes |
| Low-vibration storage | • |
| **Control system** | |
| Operating concept | FreshTouch |
| No. of temperature zones | 1 |
| Min. temperature setting range in °C | 5 |
| Max. temperature setting range in °C | 20 |
| Sabbath mode | • |
| **Fridge/Fridge section** | |
| Dry back wall | grey |
| **Safety** | |
| Lock function | • |
| Acoustic door alarm | • |
| Acoustic temperature alarm | • |
| Optical door alarm | • |
| Optical temperature alarm | • |
| **Technical data** | |
| Niche width in mm min. | 600 |

KWTUS 7054 F

Built-under wine conditioning unit, 82–88 cm niche height
with FlexiFrame, ActiveHumidity and NoteBoard in a compact design.



EAN: 4002516848752 / Material number: 12690500 /
Old Material Number: 39705410AUS

| | |
|---|---|
| Niche width in mm max. | 604 |
| Niche height in mm min. | 820 |
| Niche height in mm max. | 880 |
| Niche depth in mm | 560 |
| Appliance width in mm | 597 |
| Appliance height in mm | 819 |
| Appliance depth in mm | 579 |
| Weight in kg | 44,0 |
| Door hinge technology | Fixed door |
| Climate range | SN-ST |
| Total usable capacity in l | 110 |
| 0.75 l Bordeaux bottle capacity (no. of bottles) | 44 bottles |
| Current consumption (mA) | 1500 |
| Voltage in V | 220-240 |
| Fuse rating in A | 10 |
| Number of phases | 1 |
| Frequency in Hz | 50-60 |
| Length of supply lead in m | 2,2 |
| **Accessories included** | |
| Water filter | Nein |
| White chalk pen | • |

# KWTUS 7054 F

Built-under wine conditioning unit, 82–88 cm niche height
with FlexiFrame, ActiveHumidity and NoteBoard in a compact design.

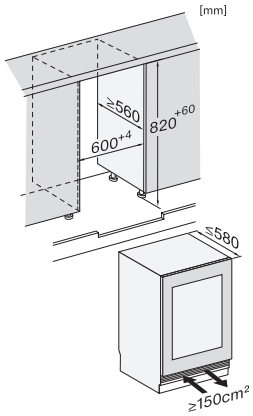


KWTUS7054F, KWTUS7055F, KWTUS7074F, KWTUS7096E, Built-under, niche dimensions

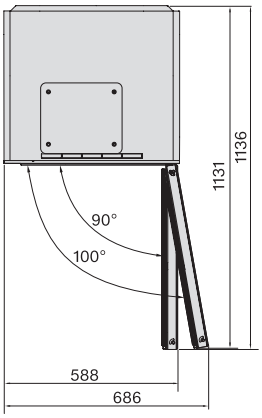


KWTUS7054F, KWTUS7055F, KWTUS7074F, Built-under, top view

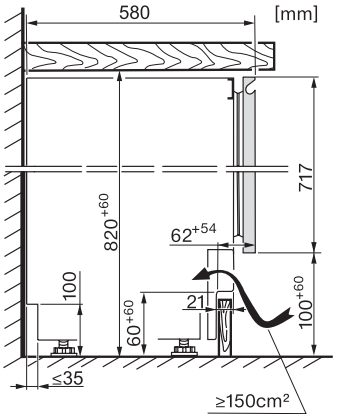


KWTUS7054F, KWTUS7055F, KWTUS7074F, Built-under, side view

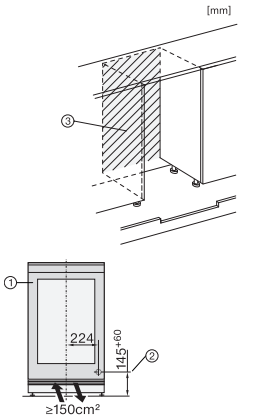


KWTUS7054F, KWTUS7055F, KWTUS7074F, KWTUS7096E, KWTUS7196E, Built-under, side view (*footnote)

1. View from the front, 2. Mains connection cable, L = 2200 mm, 3. No connection in this area

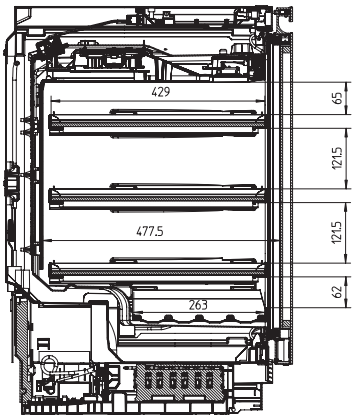


KWTUS7054F, interior dimensions

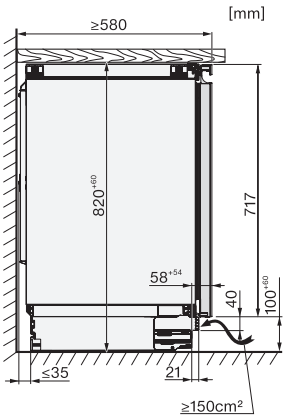


KWTUS7054F, KWTUS7055F, KWTUS7074F, Built-under, side view