KM 6523 FL

Electric hob with onset controls
for flush-fit installation for a very elegant kitchen design.

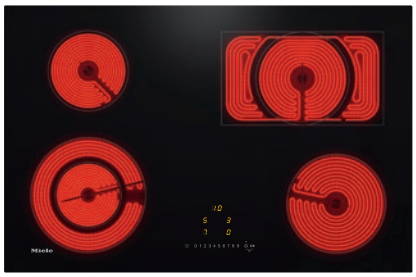

- Easy operation – EasySelect
- Modern design – 752 mm wide for flush-fit installation
- Particularly versatile – 4 cooking zones incl. 1 Vario zone
- Convenient – Auto heat-up for every cooking zone
- Safe – three level residual heat indicator for every cooking zone

EAN: 4002516573272 / Material number: 12048070 / Old Material Number: 26652370D

General information	
Model identifier	KM 6523 FL
Manufacturer material number	12048070
EAN number	4002516573272
Marketing class	Silver
Heating type	
Heating type	Electric
Construction type	
Independent of cooker	•
Design	
Elegant glass ceramic surface	•
Ceramic surface colour	Black
Flush	•
Cooking zone details	
Number of cooking zones	4
1st cooking zone/cooking area	
Position	front left
Type	Dual-circuit ring
Size in mm	Ø 120 / Ø 210
Max. rating in W	1200/2200
2nd cooking zone/cooking area	
Position	rear left
Type	Single-circuit ring
Size in mm	Ø 145
Max. rating in W	1200
3rd cooking zone/cooking area	
Position	rear right
Type	Casserole area
Size in mm	Ø 170 / 170x290
Max. rating in W	1500/2600
4th cooking zone/cooking area	
Position	front right
Type	Single-circuit ring
Size in mm	Ø 180
Max. rating in W	1800
User convenience	
Operation via sensor controls	EasySelect
Extended cooking zone	•
Display colour	Yellow
Stop & Go function	•
Recall function	•
Minute minder	•
Safety switch-off	•
Auto heat-up	•
Individual setting options (e.g. buzzers)	•
Efficiency	
Residual heat utilisation	•
Power rating in off mode in W	0,5

KM 6523 FL

Electric hob with onset controls
for flush-fit installation for a very elegant kitchen design.

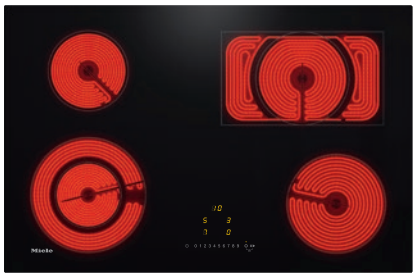

EAN: 4002516573272 / Material number: 12048070 / Old Material Number: 26652370D

Power rating in standby mode in W	0,8
Power rating in networked standby in W	2,0
Time until automatic switch to off mode in min	10
Time until automatic switch to standby in min	10
Time until automatic switch to networked standby in min	10
Cleaning and care	
Easy to clean ceramic glass	•
Safety	
Safety switch-off	•
Lock function	•
System lock	•
Overheating protection	•
Residual heat indicator	•
Technical data	
Dimensions (H x W x D) in mm	45 x 752 x 492
Dimensions in mm (width)	752
Dimensions in mm (height)	45
Dimensions in mm (depth)	492
Casing height incl. connection box in mm	45
Internal cutout dimensions in mm (width) with flush installation	730
Internal cutout dimensions in mm (depth) with flush installation	470
Weight in kg	10
External cutout dimensions in mm (width) with flush installation	756
External cutout dimensions in mm (depth) with flush installation	496
Total rated load in kW	7,80
Length of supply lead in m	1,4
Voltage in V	230
Frequency in Hz	50-60
Accessories included	
Razor-blade scraper	•
Mains cable	Yes

KM 6523 FL

Electric hob with onset controls
for flush-fit installation for a very elegant kitchen design.

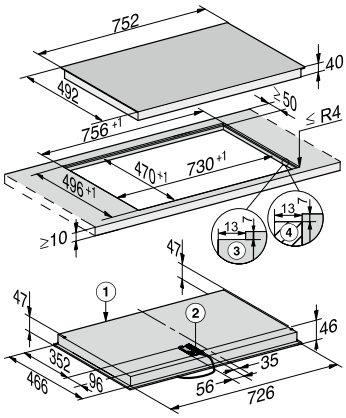

KM 6542 FL, KM 6523 FL (Installation drawing)

1) Front, 2) Mains connection box. Built-in height 46 mm, mains connection cable L = 1440 mm, 3) Stepped cut-out, 4) Wooden frame (not included),