ESW 7010

14 cm high gourmet warming drawer without handle
for preheating crockery, keeping food warm and low temperature cooking.



- The ultimate in enjoyment – low temperature cooking
- Always at the right temperature – 4 functions
- Convenient and easy – Touch control
- Opening the drawer couldn't be easier – Push2open
- Better safe than sorry – timer function with automatic switch-off

EAN: 4002516713548 / Material number: 12310290 /
Old Material Number: 30701050GB

| | |
|---|---|
| **General information** | |
| Model identifier | ESW 7010 |
| Manufacturer material number | 12310290 |
| EAN number | 4002516713548 |
| **Construction type and design** | |
| ArtLine | • |
| Handleless | • |
| **Construction type and design** | |
| Gourmet warming drawer | • |
| Colour | Obsidian black matt |
| **Operating modes** | |
| Cup warming | • |
| Plate warming | • |
| **Convenience features** | |
| Pre-heating crockery | • |
| Keeping food warm | • |
| Perfect cooking results at low temperature | • |
| **Operating modes** | |
| Keeping food warm | • |
| Low temperature cooking | • |
| **User convenience** | |
| Miele@home | • |
| Control panel with sensor controls | • |
| Fully telescopic runners for easy loading and unloading of the warming drawer | • |
| Control panel with symbols | • |
| Push2open mechanism | • |
| Stop programming | • |
| Timer function | • |
| Sabbath programme | • |
| **Cleaning and care** | |
| Flush control panel | • |
| **Safety** | |
| Cool front | • |
| Anti-slip mat | • |
| Safety switch-off | • |
| **Accessory drawer** | |
| Capacity | 6 place settings |
| **Technical data** | |
| Temperatures min. in °C | 40 |
| Temperatures max. in °C | 85 |
| Appliance width in mm | 595 |
| Appliance height in mm | 141 |
| Appliance depth in mm | 570 |
| Useable interior height in mm | 80 |
| Total rated load in kW | 0,70 |
| Voltage in V | 230 |
| Frequency in Hz | 50-60 |

ESW 7010

14 cm high gourmet warming drawer without handle
for preheating crockery, keeping food warm and low temperature cooking.



EAN: 4002516713548 / Material number: 12310290 /
Old Material Number: 30701050GB

| | |
|---|---|
| Fuse rating in A | 10 |
| Number of phases | 1 |
| Mains cable with plug | • |
| Length of supply lead in m | 2,0 |
| **Accessories included** | |
| Anti-slip mat | 1 |

ESW 7010

14 cm high gourmet warming drawer without handle
for preheating crockery, keeping food warm and low temperature cooking.

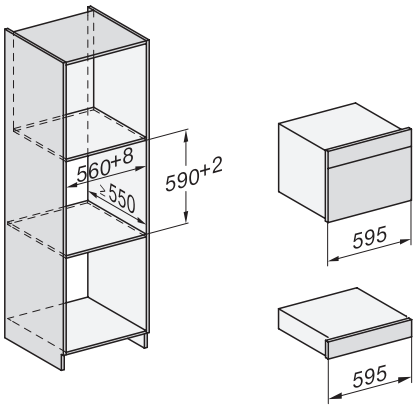


Installation_DG_DGM_DGC_XL_ESW7x10_EVS7010, installation drawings

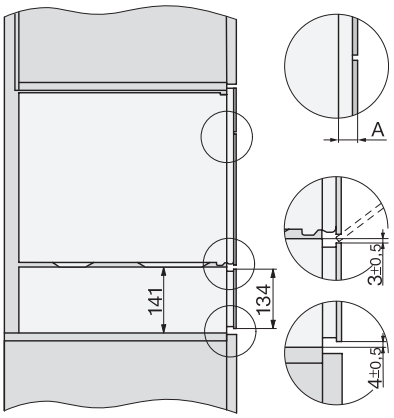


Side view_DG_DGM_ESW7x10_EVS7010 installation drawings

A) 22 mm glass, 23,3 mm stainless steel

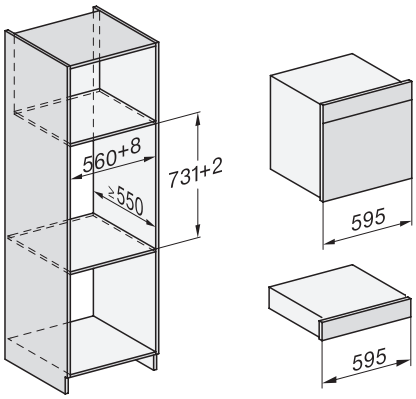


Installation_DGC_XXL_ESW7x10_EVS7010 installation drawings

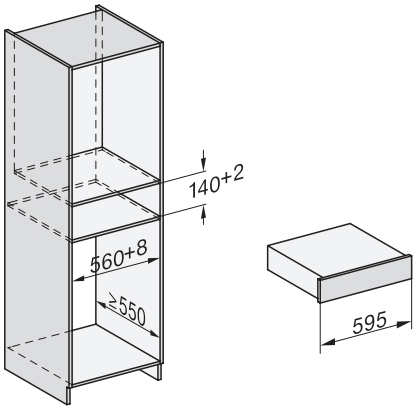


built-in ESW7x10 EVS7010, installation drawing

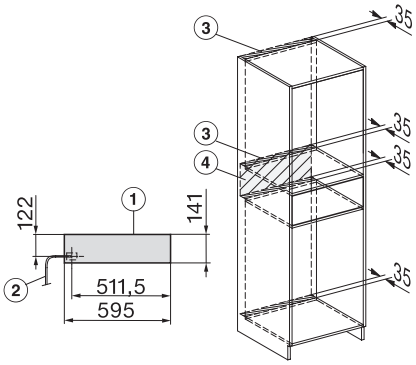


Installation ESW7x10, installation drawing, AU, GB

1) Front view, 2) Mains connection cable, L=2.000 mm, 3) Ventilation cut min. 180 cm², 4) No connection in this area

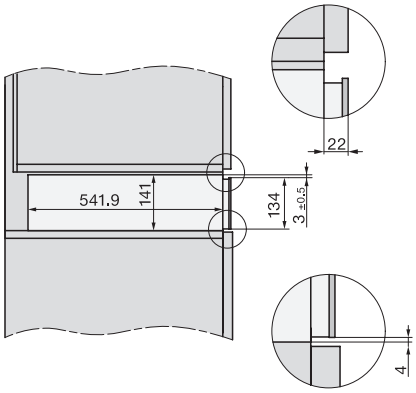


side view ESW7x10 EVS7010, installation drawing, GB, AU

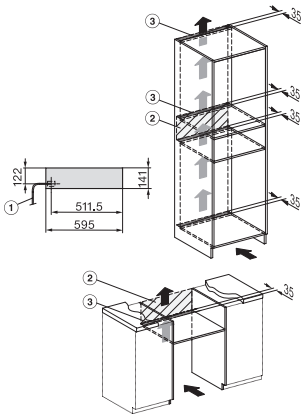


ESW7010, ESW7110 - installation drawing – Installation – GB, AU

1) Front view, 2) Mains connection cable, L=2,000 mm, 3) ventilation cut-out min. 180 cm², 4) no connection in this area