H 7260 BP CulinArt
Oven
seamless design with clear text display and pyrolytic cleaning.



- Clear text display with sensor controls – DirectSensor S
- Minimal cleaning effort – Pyrolytic cleaning
- Achieve perfect results with ease – automatic programmes
- Lots of room and flexibility – 76 l oven capacity on 5 levels
- Easy handling – FlexiClip runners
- For roasting, braising and gratinating – voucher for an induction-compatible oven dish

EAN: 4002516171553 / Material number: 11115810 / Old Material Number: 22726045D

General information	
Model identifier	H 7260 BP CulinArt
Manufacturer material number	11115810
EAN number	4002516171553
Marketing class	Gold
Construction type and design	
PureLine	•
Construction type and design	
Built-in oven	•
Colour	Stainless steel/Clean Steel
Convenience features	
Rapid heat-up	•
Operating modes	
Defrosting	•
Auto roast	•
Fan plus	•
Intensive bake	•
Conventional heat	•
Bottom heat	•
Fan grill	•
Grill	•
Eco hot air	•
Automatic programmes	•
User convenience	
Display	DirectSensor S
SoftOpen	•
SoftClose	•
MultiLingua	•
Time of day display	•
Minute minder	•
Programmable start of cooking duration	•
Programmable end of cooking duration	•
Programmable cooking duration	•
Actual temperature display	•
Target temperature display	•
Buzzer when desired temperature is reached	•
Recommended temperature	•
Individual settings	•
Efficiency	
Energy efficiency class (A+++ – D)	A+
Power rating in off mode in W	0,3
Power rating in standby mode in W	0,8
Time until automatic switch to standby in min	20
Time until automatic switch to off mode in min	20
Cleaning and care	
Stainless steel/CleanSteel finish	•
Pyrolytic self-cleaning	•
Hinged grill element	•

H 7260 BP CulinArt
Oven
seamless design with clear text display and pyrolytic cleaning.



EAN: 4002516171553 / Material number: 11115810 / Old Material Number: 22726045D

CleanGlass door	•
Safety	
Appliance cooling system and touch-cool front	•
Safety switch-off	•
System lock	•
Door lock during pyrolytic cleaning	•
Technical data	
Oven compartment volume in l	76
No. of shelf levels	5
Numbered shelf levels	•
Oven light	1 halogen spot
Plug type	Schuko plug with earth
Niche width min. in mm	560
Niche width max. in mm	568
Niche height min. in mm	590
Niche height max. in mm	595
Niche depth in mm	550
Weight in kg	47,0
Total rated load in kW	3,60
Length of supply lead in m	1,50
Voltage in V	220-240
Frequency in Hz	50
Fuse rating in A	16
Number of phases	1
Mains cable with plug	•
Replacing lamps	Customer
Accessories included	
Baking tray with PerfectClean HBB 71	1
Universal tray with PerfectClean HUBB 71	1
Baking and roasting rack PyroFit	1
PyroFit FlexiClip runners	1
Removable PyroFit side runners (pair)	1
Voucher for an induction compatible HUB 5001-M Gourmet oven dish	1
Available display languages	
Available display languages via MultiLingua	□□□□□□□□, □□, □□□□, deutsch, dansk, english, suomi, français, ελληνικά, italiano, □□□, □□□, hrvatski, bahasa malaysia, nederlands, norsk, polski, português, română, русский, svenska, srpski, slovenčina, slovenščina, español, čeština, türkçe, українська, magyar

H 7260 BP CulinArt
Oven
seamless design with clear text display and pyrolytic cleaning.

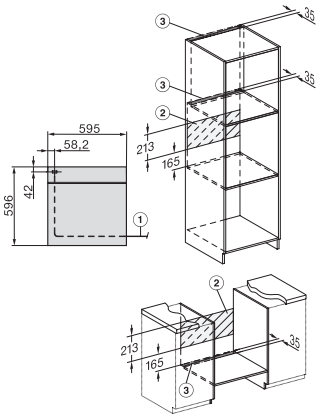

installation H7000 XL, installation drawing

1) Netzanschlussleitung, L=1500 mm, 2) In diesem Bereich kein Anschluss, 3) Lüftungsausschnitt min. 150 cm²

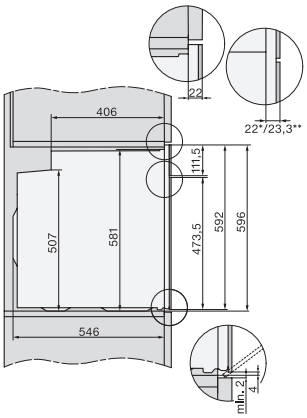

side view H7000 XL, installation drawings

22 mm – glass, 23,3 mm – metal

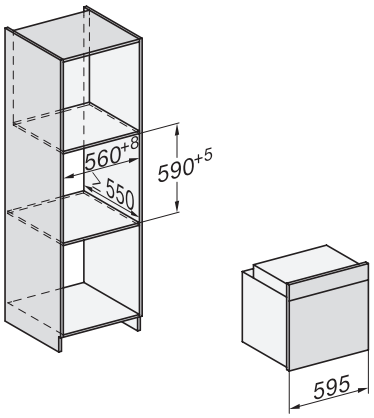

built-in H7000 XL, installation drawing

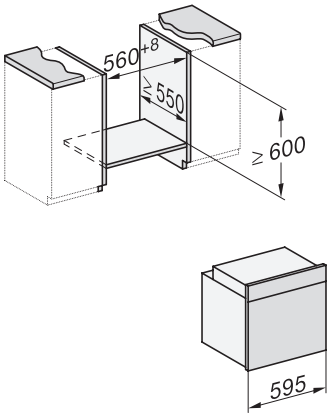

Installation H7000 XL underframe, installation drawings

If the oven is to be installed under a hob, follow the instructions for installing the hob and the height of the hob.

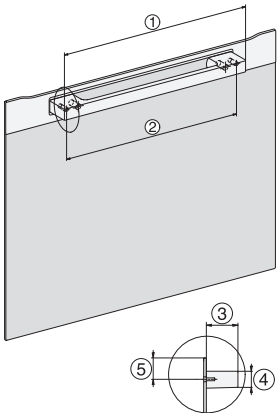

H7000 handle, installation drawing

1) 400 mm, 2) 360 mm, 3) 47 mm, 4) 24 mm, 5) 32.5 mm

H2x6x-1B/BP/E/EP/I/IP, H2850BP, H7x6xB/BP/BPX, H2x6xB, installation drawings

1) Mains connection cable, L=2000 mm, 2) No Connection in this area, 3) Lüftungsausschnitt min. 150 cm²

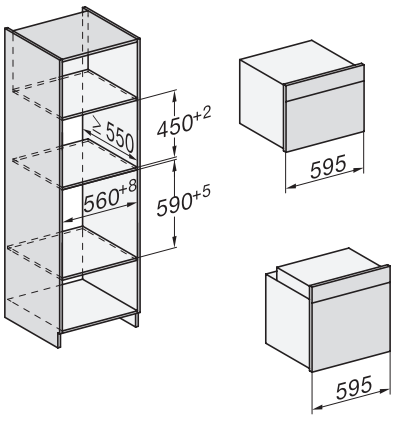

Installation H7000 BM XL, installation drawings

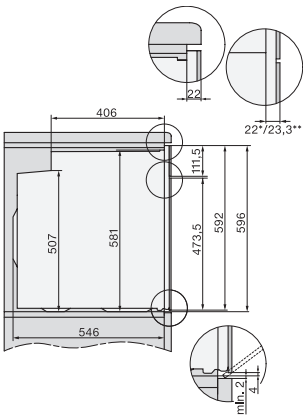

side view H7000 XL build-under, installation drawing

22 mm – glass, 23,3 mm – metal

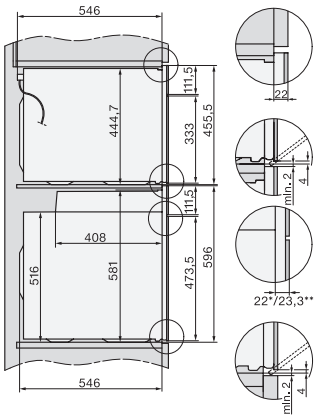

side view Kombi BM XL, installation drawings

22 mm – glass, 23,3 mm – metal

H 7260 BP CulinArt
Oven
seamless design with clear text display and pyrolytic cleaning.

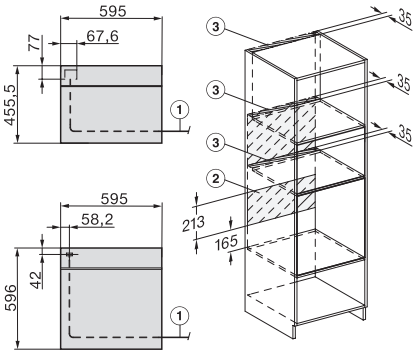

Installation Kombi BM XL, installation drawings

1) Mains connection cable, L=2000 mm, 2) No connection in this area, 3) Ventilation cut-out min. 150 cm².