KM 6520 FL

Electric hob with onset controls
with 4 cooking zones for maximum convenience at an attractive entry level price.



- Easy operation – EasySelect
- Modern design – 592 mm wide for flush-fit installation
- Particularly versatile – 4 cooking zones incl. 1 Vario zone
- Convenient – Auto heat-up for every cooking zone
- Safe – three level residual heat indicator for every cooking zone

EAN: 4002515996751 / Material number: 10882030 / Old Material Number: 26652070D

General information	
Model identifier	KM 6520 FL
Manufacturer material number	10882030
EAN number	4002515996751
Marketing class	Silver
Heating type	
Heating type	Electric
Construction type	
Independent of cooker	•
Design	
Elegant glass ceramic surface	•
Ceramic surface colour	Black
Flush	•
Cooking zone details	
Number of cooking zones	4
1st cooking zone/cooking area	
Position	front left
Type	Single-circuit ring
Size in mm	Ø 180
Max. rating in W	1800
2nd cooking zone/cooking area	
Position	rear left
Type	Single-circuit ring
Size in mm	Ø 160
Max. rating in W	1500
3rd cooking zone/cooking area	
Position	rear right
Type	Dual-circuit ring
Size in mm	Ø 120 / Ø 210
Max. rating in W	750/2200
4th cooking zone/cooking area	
Position	front right
Type	Single-circuit ring
Size in mm	Ø 145
Max. rating in W	1200
User convenience	
Operation via sensor controls	EasySelect
Display colour	Yellow
Stop & Go function	•
Recall function	•
Minute minder	•
Safety switch-off	•
Auto heat-up	•
Individual setting options (e.g. buzzers)	•
Efficiency	
Residual heat utilisation	•
Power rating in off mode in W	0,5
Power rating in standby mode in W	0,8

KM 6520 FL

Electric hob with onset controls

with 4 cooking zones for maximum convenience at an attractive entry level price.



EAN: 4002515996751 / Material number: 10882030 / Old Material Number: 26652070D

Power rating in networked standby in W	2,0
Time until automatic switch to off mode in min	10
Time until automatic switch to standby in min	10
Time until automatic switch to networked standby in min	10
Cleaning and care	
Easy to clean ceramic glass	•
Safety	
Safety switch-off	•
Lock function	•
System lock	•
Overheating protection	•
Residual heat indicator	•
Technical data	
Dimensions (H x W x D) in mm	46 x 592 x 492
Dimensions in mm (width)	592
Dimensions in mm (height)	46
Dimensions in mm (depth)	492
Casing height incl. connection box in mm	40
Internal cutout dimensions in mm (width) with flush installation	570
Internal cutout dimensions in mm (depth) with flush installation	470
Weight in kg	8
External cutout dimensions in mm (width) with flush installation	596
External cutout dimensions in mm (depth) with flush installation	496
Total rated load in kW	6,70
Length of supply lead in m	1,4
Voltage in V	230
Frequency in Hz	50-60
Accessories included	
Razor-blade scraper	•
Mains cable	Yes

KM 6520 FL

Electric hob with onset controls

with 4 cooking zones for maximum convenience at an attractive entry level price.

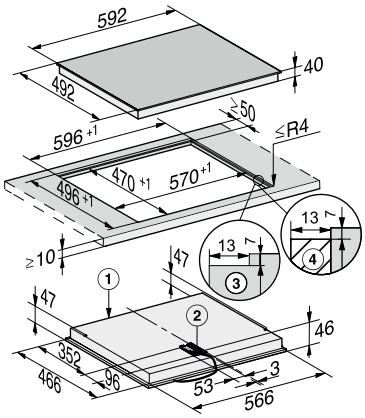

KM 6520 FL, KM 6539 FL (Installation drawing)

1) Front, 2) Mains connection box. built-height 46 mm, mains connection cable L = 1440 mm, 3) Stepped cut-out natural stone worktops, 4) Wooden frame 13 mm (not included)