KM 8695-2 FL MattFinish
Induction hob with onset controls
936 mm | Full-surface | M Sense ready | MattFinish



EAN: 4002516976004 / Material number: 12948340 /
Old Material Number: 26186955GB

- Resistant matt surface for a sophisticated kitchen design – MattFinish
- Full-surface induction for up to 6 items of cookware
- Precise settings via 6 MultiSlide sliders including intelligent networking
- Prepared for cooking and frying assistance with M Sense cookware – M Sense ready
- A width of 936 mm for surface-mounted or flush-fit installation
- Shortest heat-up times thanks to Booster level

KM 8695-2 FL MattFinish
Induction hob with onset controls
936 mm | Full-surface | M Sense ready | MattFinish

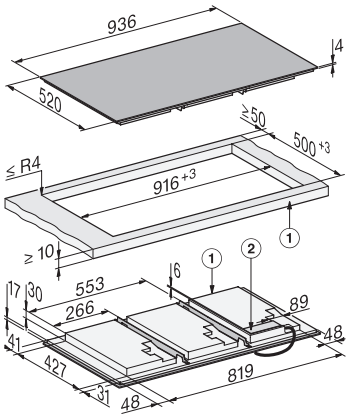

KM8695-2FL, KM8695-2FL MattFinish, surface-mounted (*Fußnote) Installation drawing

1) front, 2) Mains connection box, The mains connection cable (L = 1440 mm) is enclosed loose

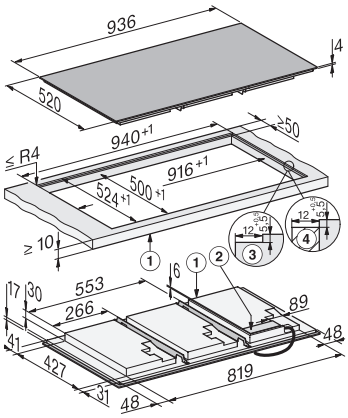

KM8695-2FL, KM8695-2FL MattFinish, flush (*Fußnote) (Installation drawing)

1) front, 2) Mains connection box, The mains connection cable (L = 1440 mm) is enclosed loosely, 3) Step milling natural stone worktop, 4) Wooden strip 12 mm (no supplied accessories)