KFMC 3844 FD
MasterCool FrenchDoor
MasterFresh Pro | Cameras | AirClean system | IceMaker | BrilliantLight Pro



- Food stays fresh for up to 5 times longer – MasterFresh Pro
- -
- Up to 95 % less odours – thanks to Longlife AirClean system
- Ice cubes for cold drinks – IceMaker
- Practical illumination with elegant LEDs – BrilliantLight Pro



EAN: 4002516914655 / Material number: 12866800 /
Old Material Number: 38384420GB

General information	
Model identifier	KFMC 3844 FD
Manufacturer material number	12866800
EAN number	4002516914655
Marketing class	Diamond
Appliance category	
Fridge-freezer	•
Construction type	
Built-in appliance	•
Integrated appliance	•
Door hinge	Left and right
Side-by-side enabled	•
Design	
Lighting	BrilliantLight Pro
SmartLight	•
User convenience	
Networking with Miele@home	•
Cameras in the refrigerator	4
Freshness system	MasterFresh Pro + DailyFresh ExtraCool
Longlife AirClean system	•
DynaCool	•
NoFrost	•
DuplexCool Pro	•
SoftClose	•
SelfClose	•
Number of IceMakers with mains water connection	1
IceMaker with mains water connection	•
Push2open	•
FullAccess	•
EasyClean	•
MaxLoad hinge	•
Smart Extras	
Push notifications	•
Cooling tips	•
Cooling modes	•
IceMaker	•
FoodView	•
Smart Extras	
RemoteUpdate	•
Smart Home Integration	•
Control system	
Operating concept	M Touch Pro
Precise adjustment	Fridge and freezer temperature
Independent temperature regulation of fridge and freezer zones	•
SuperCool&AirClean	•

KFMC 3844 FD
MasterCool FrenchDoor
MasterFresh Pro | Cameras | AirClean system | IceMaker | BrilliantLight Pro



EAN: 4002516914655 / Material number: 12866800 /
Old Material Number: 38384420GB

SuperFreeze	•
No. of temperature zones	3
Sabbath mode	•
Holiday mode	•
QuickIce	•
Fridge/Fridge section	
Height-adjustable, full-width tempered glass shelves	1
Height-adjustable, half-width tempered glass shelves	2
Number of VeggieBoxes	1
No. of crisper drawers	2
Door shelves for jars	4
Door rack for bottles	2
Freezer/Freezer section	
Number of freezer baskets	3
of which on telescopic runners	2
Efficiency	
Energy efficiency class (A–G)	D
Annual energy consumption in kWh	285.00
Energy consumption in 24 h in kWh	0.75
Safety	
Spill-proof glass shelves	•
Acoustic door alarm	•
Acoustic temperature alarm	•
Technical data	
Niche width in mm min.	914
Niche width in mm max.	914
Niche height in mm min.	2134
Niche height in mm max.	2134
Niche depth in mm	635
Appliance width in mm	895
Appliance height in mm	2123
Appliance depth in mm	608
Weight in kg	234.0
Door hinge technology	Fixed door
Max. door front weight – refrigerator, in kg	54
Max. door front weight – freezer, in kg	14
Climate class	SN-T
Refrigerator compartment in l	379
including PerfectFresh zone in l	60
4* freezer compartment in l	197
Total usable capacity in l	576
Storage time in case of fault in h	19
Freezer capacity in kg/24 h	14.00
Acoustic airborne noise emission class (A–D)	C
Sound emissions in dB(A) re 1 pW	39
Current consumption (mA)	3000
Voltage in V	220 - 240
Fuse rating in A	10

KFMC 3844 FD
MasterCool FrenchDoor
MasterFresh Pro | Cameras | AirClean system | IceMaker | BrilliantLight Pro



EAN: 4002516914655 / Material number: 12866800 /
Old Material Number: 38384420GB

Number of phases	1
Frequency in Hz	50 - 60
Length of supply lead in m	3.0
Replacing lamps	Service
Accessories included	
Longlife AirClean filter	•
Water filter	•
Ice scoop	•
Available display languages	
Available display languages via MultiLingua	□□□□□□□□, български, □□, □□□□, deutsch, dansk, english, english (AU), english (CA), english (GB), english (US), eesti, suomi, français, français (CA), français (FR), ελληνικά, italiano, □□□, Қазақ, □□□, hrvatski, latviesu, lietuviu, bahasa malaysia, nederlands, norsk, polski, português, română, русский, svenska, srpski, slovenčina, slovenščina, español, čeština, türkçe, українська, magyar

KFMC 3844 FD
MasterCool FrenchDoor
MasterFresh Pro | Cameras | AirClean system | IceMaker | BrilliantLight Pro

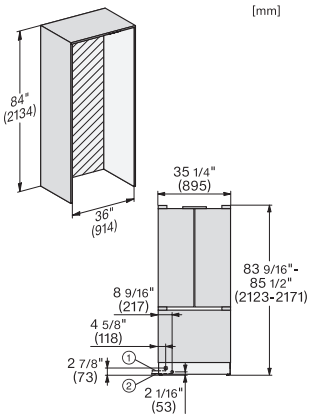

KFMC3642FD, KFMC3844FD, MasterCool III, installation, panel ready

Information for KFMC 3642 FD (US/CD) only, View from the front, 1. Mains connection cable, L = 3000 mm (118 inch), 2. Water connection L = 1800 mm (70 inch), Information for KFMC 3844 FD (EU) , 1. Mains connection cable, L = 3000 mm , 2. Water connection L = 1800 mm

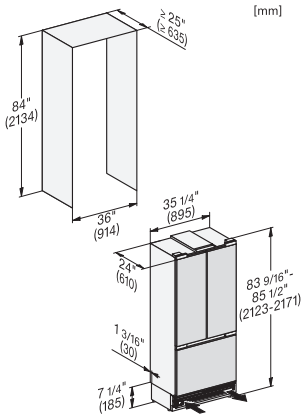

KFMC3642FD, KFMC3844FD, MasterCool III, integration, panel ready

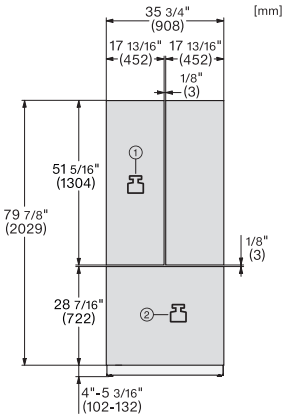

KFMC3642FD, KFMC3844FD, MasterCool III, front view

1. 54 kg / 119,0 lbs, 2. 14 kg / 30,8 lbs

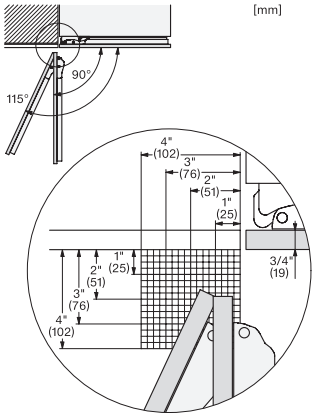

KFMC3632R+L, KFMC3642R+L, KFMC3836R+L, KFMC3834R+L, KFMC3858FD, MasterCool III, hinge clearance, installation

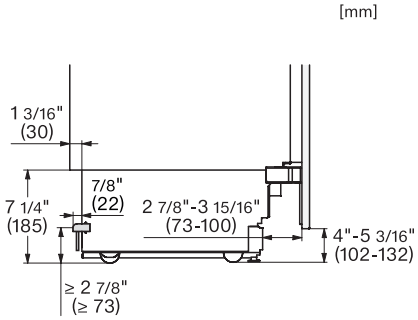

KFMC3632R+L, KFMC3642R+L, KFMC3836R+L, KFMC3834R+L, KFMC3858FD, MasterCool III, Side-view bottom, installation

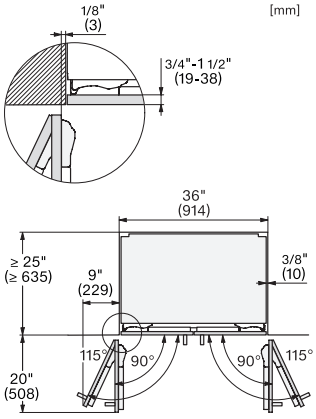

KFMC3642FD, KFMC3844FD, MasterCool III, panel ready, top view