KM 6031

Oven-controlled electric hob unit
with 1 extended zone and 1 Vario zone for versatile use.

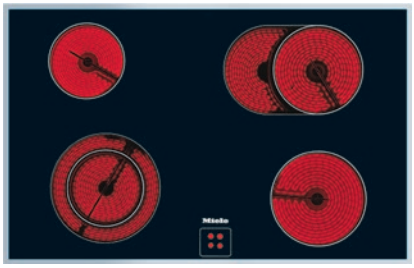

- Attractive design – 794 mm wide with all-round frame
- Very versatile – 4 cooking zones with 1 extended and 1 Vario zone
- Safe – residual heat indicator for every cooking zone

EAN: 4002514232263 / Material number: 06910590 /
Old Material Number: 26603150D

General information	
Model identifier	KM 6031
Manufacturer material number	06910590
EAN number	4002514232263
Marketing class	Silver
Heating type	
Heating type	Electric
Construction type	
Combined with cooker	•
Design	
Elegant glass ceramic surface	•
Ceramic surface colour	Black
Stainless-steel frame	•
Print design	Basalt grey decor
Surface-mounted installation	•
Cooking zone details	
Number of cooking zones	4
1st cooking zone/cooking area	
Position	front left
Type	Dual-circuit ring
Size in mm	Ø 145 / Ø 210
Max. rating in W	1000/2200
2nd cooking zone/cooking area	
Position	rear left
Type	Single-circuit ring
Size in mm	Ø 145
Max. rating in W	1200
3rd cooking zone/cooking area	
Position	rear right
Type	Casserole area
Size in mm	Ø 170 / 170x265
Max. rating in W	1500/2400
4th cooking zone/cooking area	
Position	front right
Type	Single-circuit ring
Size in mm	Ø 180
Max. rating in W	1800
User convenience	
Extended cooking zone	•
Operation via knobs	•
Display colour	Red
Efficiency	
Residual heat utilisation	•
Cleaning and care	
Easy to clean ceramic glass	•
Safety	
Residual heat indicator	•

KM 6031
Oven-controlled electric hob unit
with 1 extended zone and 1 Vario zone for versatile use.

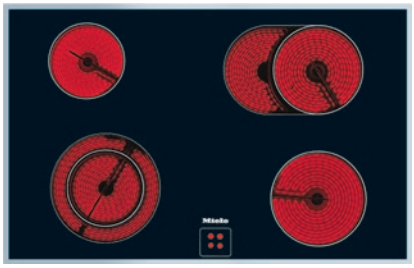

EAN: 4002514232263 / Material number: 06910590 /
Old Material Number: 26603150D

Technical data	
Dimensions (H x W x D) in mm	41 x 794 x 514
Dimensions in mm (width)	794
Dimensions in mm (height)	41
Dimensions in mm (depth)	514
Cutout dimensions in mm (width) with surface-mounted installation	780 mm
Cutout dimensions in mm (depth) with surface-mounted installation	500 mm
Weight in kg	10
Total rated load in kW	7,60-8,30
Voltage in V	230-240
Frequency in Hz	50-60
Accessories included	
Razor-blade scraper	•
Mains cable	Yes

KM 6031

Oven-controlled electric hob unit
with 1 extended zone and 1 Vario zone for versatile use.

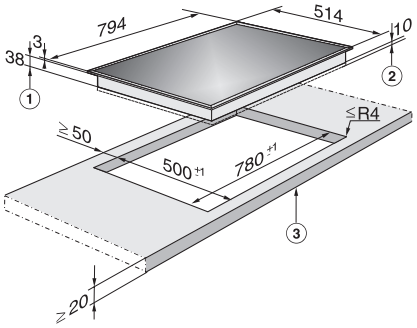

KM6031, KM6032, KM6071 (installation drawing)

1) Casing depth, 2) Space for fasteners and conduit entry,
3) Front