KM 2334
Gas hob
with a mono wok burner for special applications.



- Easy and direct controls – operation via rotary controls
- Professional design – 770 mm wide stainless steel trough
- Particularly versatile – 5 burners incl. 1 mono wok
- Extremely safe – GasStop function
- Easy cleaning – dishwasher-safe ComfortClean pot rests

EAN: 4002515341407 / Material number: 09606940 / Old Material Number: 26233450I

General information	
Model identifier	KM 2334
Manufacturer material number	09606940
EAN number	4002515341407
Marketing class	Gold
Heating type	
Heating type	Gas
Construction type	
Independent of cooker	•
Design	
Miele logo embossed in stainless steel	•
Stainless steel trough	•
Cast iron pot rests (matt black enamelled)	•
Cooking zone details	
Number of cooking zones	5
Gas burner power rating	
Small burner in kW	1,00
Medium burner in kW	1,70
Large burner in kW	2,00
Mono wok burner in kW	4,00
1st cooking zone/cooking area	
Position	front left
Type	Economy burner
2nd cooking zone/cooking area	
Position	rear left
Type	High-speed burner
3rd cooking zone/cooking area	
Position	Centred
Type	Single wok burner
4th cooking zone/cooking area	
Position	rear right
Type	High-speed burner
5th cooking zone/cooking area	
Position	front right
Type	Standard burner
User convenience	
Operation via sensor controls	Knob
Operation via knobs	•
Electronic ignition with single-hand operation	•
Cleaning and care	
Dishwasher-proof pot rests	•
Safety	
GasStop	•
Technical data	
Dimensions (H x W x D) in mm	75 x 770 x 508
Dimensions in mm (width)	770
Dimensions in mm (height)	75
Dimensions in mm (depth)	508

KM 2334
Gas hob
with a mono wok burner for special applications.



EAN: 4002515341407 / Material number: 09606940 / Old Material Number: 26233450I

Casing height incl. connection box in mm	100
Cutout dimensions in mm (width) with surface-mounted installation	750 mm
Cutout dimensions in mm (depth) with surface-mounted installation	490 mm
Weight in kg	11
Length of supply lead in m	2,0
Position of gas connection	Hinten links
Voltage in V	220-240
Frequency in Hz	50-60
Accessories included	
Mains cable	No
Wok ring	•
Small trivet	•

KM 2334
Gas hob
with a mono wok burner for special applications.

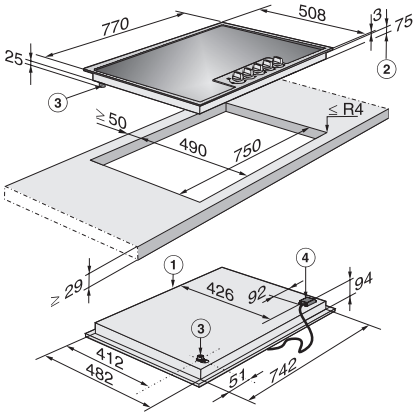

KM 2334 (installation drawing)

1. Front, 2. Building-in depth, 3. Gas connection R 1/2 - ISO 7-1 (DIN EN 10226), 4. Mains connection box with mains connection cable L 2000 mm