DA 2390
Extractor unit
with energy-efficient LED lighting and light-touch switches for easy use.



- Customised kitchen design – fully integrated in 884 mm width
- Space saving – suitable for narrow wall units over 30 cm deep
- Powerful – 600 m3/h in Booster level
- Efficient filtration- 10-ply stainless-steel grease filter
- Safe and easy to clean – Miele CleanCover

EAN: 4002515778302 / Material number: 10451560 / Old Material Number: 28239055D

General information	
Model identifier	DA 2390
Manufacturer material number	10451560
EAN number	4002515778302
Marketing class	Silver
Construction type	
Integrated extractor	•
Construction type and design	
Colour	Stainless steel
Operating modes	
Type of air guide	Can be retrofitted
Recirculation conversion kit (order separately)	DUU 151
Active charcoal filter (order separately)	DKF 19-P
User convenience	
Electronic controls	•
Controls	Light-touch switches with LEDs
Power levels (number without Booster level)	3
Booster levels	1
Easy-to-clean canopy interior – CleanCover	•
Efficiency	
Energy efficiency class (A+++ – D)	A
Annual energy consumption in kWh/year	55,3
Fluid dynamic efficiency class	A
Lighting efficiency class	A
Grease filtering efficiency class	A
Filter system	
Number of dishwasher-safe stainless steel grease filters (10-ply)	2
Lighting	
Number x W	4 x 3 W
Light intensity in Lx	500 lx
Colour temperature in K	3000 Kelvin
Fan	
Dual-action blower	•
Exhaust air	
Air throughput in Level 1 (m^3/h) according to EN 61591	250
Air throughput in Level 2 (m^3/h) according to EN 61591	300
Air throughput in Level 3 (m^3/h) according to EN 61591	360
Air throughput in Booster level 1 (m^3/h) according to EN 61591	600
Sound power in Level 1 (dB(A) re 1 pW) according to EN 60704-3	47,0
Sound power in Level 2 (dB(A) re 1 pW) according to EN 60704-3	48,0
Sound power in Level 3 (dB(A) re 1 pW) according to EN 60704-3	52,0
Sound power in Booster level 1 (dB(A) re 1 pW) acc. to EN 60704-3	64,0

DA 2390
Extractor unit
with energy-efficient LED lighting and light-touch switches for easy use.



EAN: 4002515778302 / Material number: 10451560 / Old Material Number: 28239055D

Sound pressure in Level 1 (dB(A) re 20 µPa) according to EN 60704-2-13	31,0
Sound pressure in Level 2 (dB(A) re 20 µPa) according to EN 60704-2-13	34,0
Sound pressure in Level 3 (dB(A) re 20 µPa) according to EN 60704-2-13	38,0
Sound pressure in Booster level 1 (dB(A) re 20 µPa) acc. to EN 60704-2-13	50,0
Recirculation	
Air throughput in Level 1 (m^3/h) according to EN 61591	190
Air throughput in Level 2 (m^3/h) according to EN 61591	250
Air throughput in Level 3 (m^3/h) according to EN 61591	320
Air throughput in Booster level 1 (m^3/h) according to EN 61591	500
Sound power in Level 1 (dB(A) re 1 pW) according to EN 60704-3	54,0
Sound power in Level 2 (dB(A) re 1 pW) according to EN 60704-3	60,0
Sound power in Level 3 (dB(A) re 1 pW) according to EN 60704-3	64,0
Sound power in Booster level 1 (dB(A) re 1 pW) acc. to EN 60704-3	72,0
Sound pressure in Level 1 (dB(A) re 20 µPa) according to EN 60704-2-13	39,0
Sound pressure in Level 2 (dB(A) re 20 µPa) according to EN 60704-2-13	45,0
Sound pressure in Level 3 (dB(A) re 20 µPa) according to EN 60704-2-13	49,0
Sound pressure in Booster level 1 (dB(A) re 20 µPa) acc. to EN 60704-2-13	57,0
Safety	
Safety switch-off	•
Technical data	
Canopy width in mm	884
Canopy height in mm	63
Canopy depth in mm	297
Net weight in kg	13,0
Length of supply lead in m	1,5
Standard plug fitted	•
Minimum height above electric hobs in mm	450
Minimum safety distance above gas hobs (max. 12.6 kW total power, burner ≤ 4.5 kW) in mm	650
Number of phases	1
Total rated load in kW	0,23
Voltage in V	230
Fuse rating in A	10
Frequency in Hz	50
Installation notes	
Extraction ducting connection at top	•
Diameter of exhaust duct in mm	150
Accessories included	
Non-return flap	•

DA 2390
Extractor unit
with energy-efficient LED lighting and light-touch switches for easy use.

DA 2390
Extractor unit
with energy-efficient LED lighting and light-touch switches for easy use.

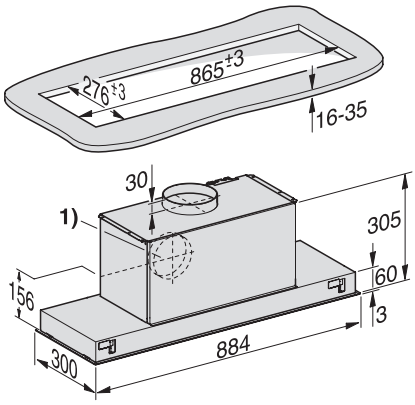

DA2390 (Installation drawing)

The cooker bonnet is fixed in the cut-out with the help of clamps. This requires a solid construction of the installation surface, e.g. made of wood. Make sure that the construction has sufficient load-bearing capacity. In the area of the clamps, components such as struts or pipes must have a distance of at least 25 mm from the cut-out.,
1) Vent connection alternatively to rear