Miele

M 2230 SC

Built-in microwave oven
with sensor controls on the side for convenient operation.



- 7-segment display with sensor controls – EasySensor
- Perfect defrosting and cooking – Automatic programmes
- Food remains at serving temperature – keeping warm function
- Perfect and energy-saving lighting – LED lighting

EAN: 4002516128229 / Material number: 11143760 /
Old Material Number: 24223020GB

General information	
Model identifier	M 2230 SC
Manufacturer material number	11143760
EAN number	4002516128229
Marketing class	Silver
Construction type and design	
SideControl	•
Construction type and design	
Built-in microwave oven	•
Colour	Obsidian black
Convenience features	
Keeping warm	•
Operating modes	
Microwave	•
Automatic programmes	•
User convenience	
Display	EasySensor
Time of day display	•
Minute minder	•
Programmable cooking duration	•
Quick microwave	•
Individual settings	•
Efficiency	
Night dimming	•
Power rating in off mode in W	0,3
Power rating in standby mode in W	0,8
Time until automatic switch to standby in min	20
Cleaning and care	
Stainless steel oven compartment	•
Safety	
System lock	•
Safety switch-off	•
Safety lock "Door" warning	•
Technical data	
Oven compartment volume in l	17
Door hinge	Left
Oven light	1 LED spot
Turntable diameter in cm	27,2
Oven interior height in cm	20,2
Plug type	GB three-pin plug
Electronically controlled microwave power	•
Microwave power levels in W	80 /150 /300 /450 /600 /700 /800
Maximum microwave power in W	800
Niche width min. in mm	562
Niche width max. in mm	568
Niche-independent venting	•
Niche height min. in mm	350

M 2230 SC
Built-in microwave oven
with sensor controls on the side for convenient operation.



EAN: 4002516128229 / Material number: 11143760 /
Old Material Number: 24223020GB

Niche height max. in mm	362
Niche depth in mm	310
Appliance dimensions (W x H x D) in mm	595 x 372 x 310
Weight in kg	14,4
Total rated load in kW	1,25
Length of supply lead in m	1,60
Voltage in V	220-240
Frequency in Hz	50
Fuse rating in A	13
Number of phases	1
Mains cable with plug	•
Replacing lamps	Service
Accessories included	
Turntable	1

M 2230 SC

Built-in microwave oven
with sensor controls on the side for convenient operation.

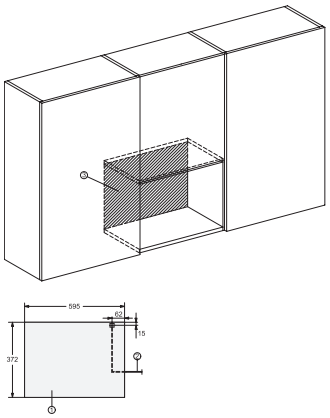

M2230SC, installation drawings

1) Front view, 2) Mains connection cable L=1,600 mm, 3) No connection in this area

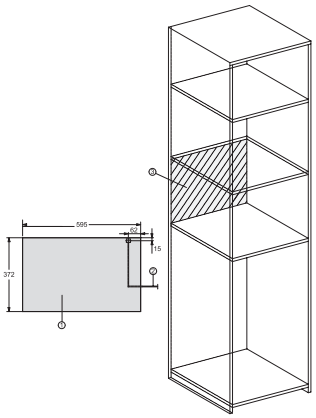

M2230SC, installation drawings

1) Front view, 2) Mains connection cable L=1,600 mm, 3) No connection in this area

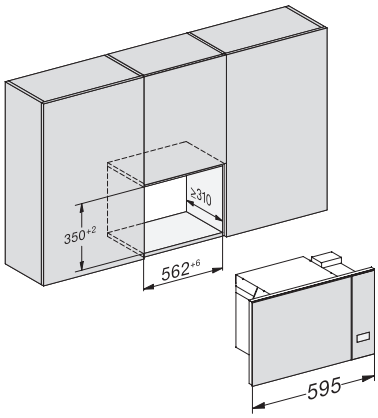

M223xSC, installation drawings

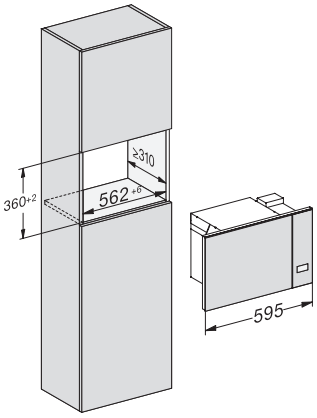

M223xSC, installation drawings

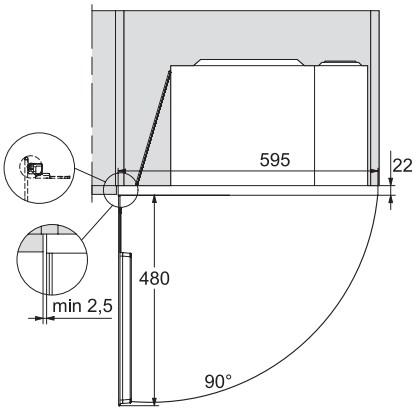

M223xSC, installation drawing

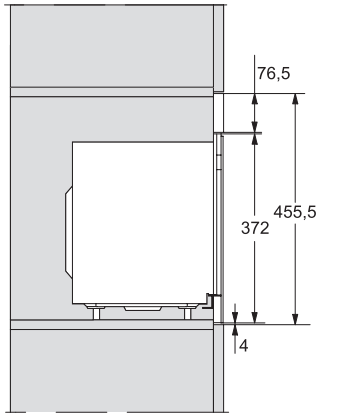

M223xSC, AB45-2, side view installation drawing

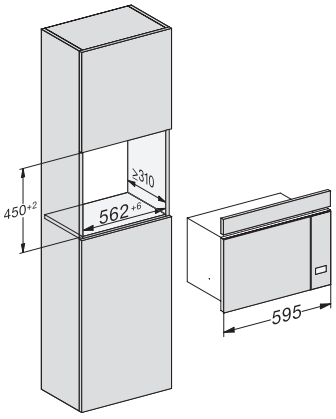

M223xSC, AB45-2, installation drawing

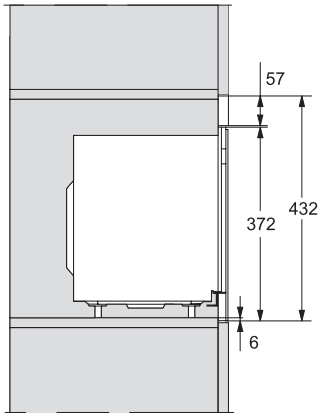

M223xSC, AB42-1, installation drawing

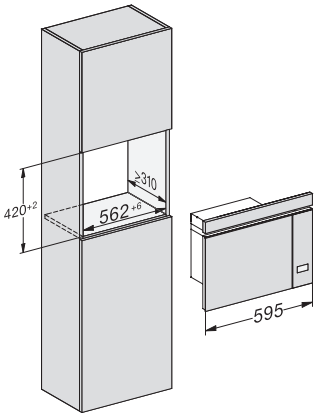

M223xSC, AB42-1, installation drawing

M 2230 SC
Built-in microwave oven
with sensor controls on the side for convenient operation.

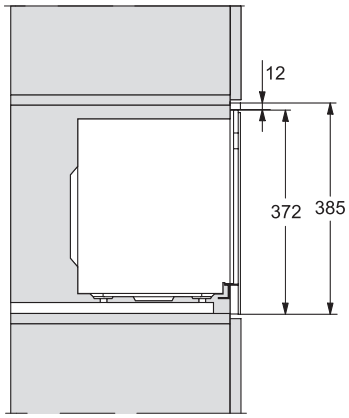

M223xSC, AB38-1, installation drawing

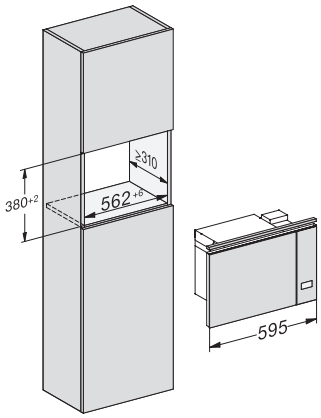

M223xSC, AB38-1, installation drawing

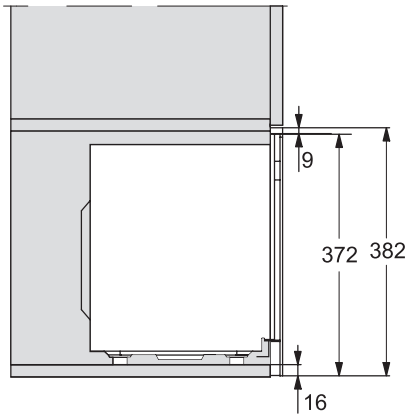

M223xSC, AB36, installation drawing

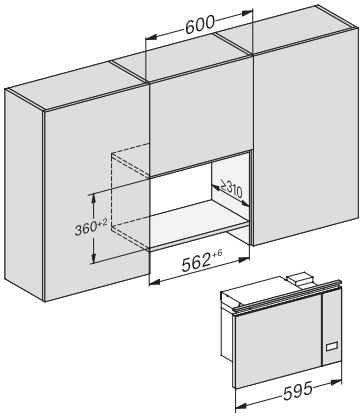

M223xSC, AB36, installation drawing

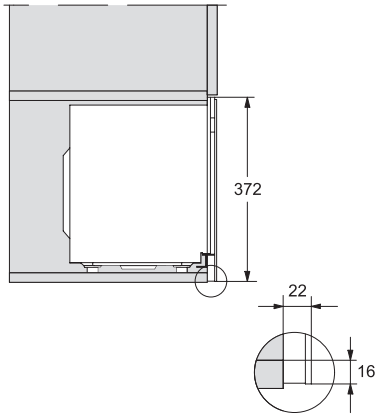

M22xxSC, installation drawing

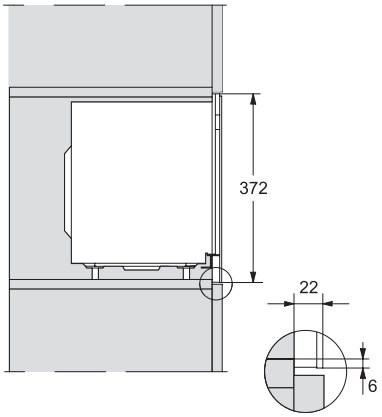

M22xxSC, installation drawing