TWL780WP EcoSpeed&Steam&9kg
T1 heat-pump dryer:
9 kg I ComfortSensor I SteamCare I SilenceDrum I DryCare 40



- Tested for 20 years of perfect laundry care*
- SteamCare smoothes and freshens up, saving you time during ironing
- The SilenceDrum** reduces noise for much quieter drying
- Save time sorting your laundry; DryCare 40 is perfect for a 40 °C wash***
- EcoSpeed efficiently reduces the drying time by 20 minutes****
- Complete app control of your tumble dryer with Miele@home*****

* During the development phase of the T1 / T2 tumble dryer series, Miele tested models and core components in 5000 drying cycles (= 5 drying cycles per week for 50 weeks per year) in various programmes. More: miele.com/20years

** Patent EP 4 163 433

*** Not suitable for woollens or silks.

**** Time savings calculated compared to Miele tumble dryers without EcoSpeed with the same load size and similar energy efficiency. Tested in the "Cottons" programme with a full load size.

***** This is a separate digital offer from Miele & Cie. KG. The range of functions can vary depending on the model and the country. Acceptance of the Terms and Conditions and Privacy Policy for Miele digital products and services in the Miele app required. Miele reserves the right to change or discontinue the digital offer at any time.

EAN: 4002516476054 / Material number: 11871920 /
Old Material Number: 12WL7802GB

General information	
Model identifier	TWL780WP EcoSpeed&Steam&9kg
Manufacturer material number	11871920
EAN number	4002516476054
Marketing class	Platinum
Construction type	
Suitable for stacking	•
Door hinging	left, Reversible
Side-by-side	•
Slot-in	•
Model	
Product brand	T1 White Edition
Heat pump dryer	•
Design	
Appliance colour	Lotus white
Control panel colour	Lotus white
Door design	Obsidian black with chrome ring
Rotary selector colour	Lotus White / Chrome ring
Control panel version	5° inclined
Control type	Rotary control
Display	ComfortSensor white, 1 line
Drying results	
PerfectDry precision drying	•
FragranceDos² fragrance system	•
Intelligent drum reversal	•
HygieneDry	•
Gentle laundry care	
SilenceDrum	•
Load in kg	9
User convenience	
Networking with Miele@home	•
Wash2Dry	•
Delay start up to 24 hours	•
Time left display	•
Programme sequence indicator	No
Drum lighting	LED
MultiLingua	•
Acoustics package for the lowest sound emissions	•
Condensate container	•
Integrated condensed water drainage	•
AddLoad	•
Efficiency	
EcoFeedback	•
EcoDry technology	•
Maintenance-free heat exchanger	•
ProfiEco motor	•

TWL780WP EcoSpeed&Steam&9kg
T1 heat-pump dryer:
9 kg I ComfortSensor I SteamCare I SilenceDrum I DryCare 40



EAN: 4002516476054 / Material number: 11871920 /
Old Material Number: 12WL7802GB

EcoSpeed	•
Drying programmes	
Automatic plus	•
Cottons (coloureds)	•
Cottons arrow	•
Minimum iron	•
Delicates	•
Shirts	•
Silks handcare	•
Woollens handcare	•
Express	•
Denim	•
Outerwear	•
Proofing	•
Sportswear	•
Standard pillows	•
Cool air	•
Warm air	•
Basket programme	•
Pre-Ironing	•
Bed linen	•
Steam care	•
Drying extras	
Anti-crease	•
Buzzer	•
DryCare 40	•
DryFresh	•
PowerFresh	•
Quality	
Soft ribs	•
Safety	
PIN-Code	•
Empty out container indicator	•
Clean filter indication	•
Optical interface	•
Technical data	
Dimensions (H x W x D) in mm	850 x 596 x 643
Dimensions in mm (width)	596
Dimensions in mm (height)	850
Dimensions in mm (depth)	643
Weight in kg	57
Voltage in V	220-240
Fuse rating in A	13
Frequency in Hz	50
Total rated load in kW	1,10
Length of supply lead in m	2,0
Hermetically sealed	•
Type of coolant	R290

TWL780WP EcoSpeed&Steam&9kg
T1 heat-pump dryer:
9 kg I ComfortSensor I SteamCare I SilenceDrum I DryCare 40



EAN: 4002516476054 / Material number: 11871920 /
Old Material Number: 12WL7802GB

Refrigerant quantity in kg	0,14
Refrigerant global warming potential in CO_2 e	3
Appliance global warming potential in CO_2 e	0,42
Replacing lamps	Service
Accessories included	
Fragrance flacon	•
Voucher for a second fragrance flacon	•
Available display languages	
Available display languages via MultiLingua	□□, □□□□, deutsch, dansk, english (AU), english (GB), english (US), suomi, français (CA), français (FR), ελληνικά, italiano, □□□, □□□, hrvatski, bahasa malaysia, nederlands, norsk, polski, português, română, русский, svenska, srpski, slovenčina, slovenščina, español, čeština, türkçe, українська, magyar

TWL780WP EcoSpeed&Steam&9kg
T1 heat-pump dryer:
9 kg I ComfortSensor I SteamCare I SilenceDrum I DryCare 40

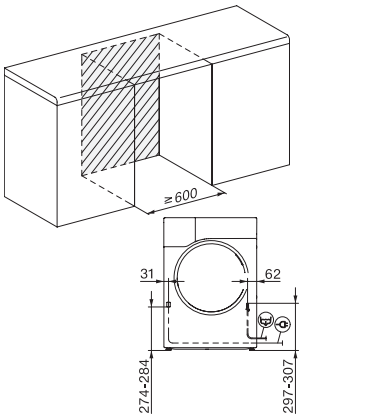

T1 installation drawing, facia 5 degree, measures in mm

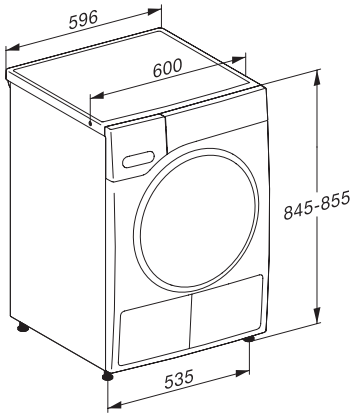

T1 drawing, facia 5 degree, measures in mm

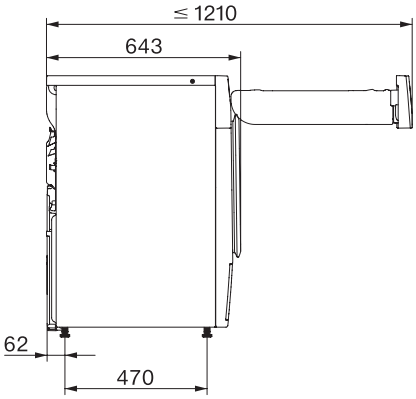

T1 drawing, facia 5 degree, with porthole, measures in mm

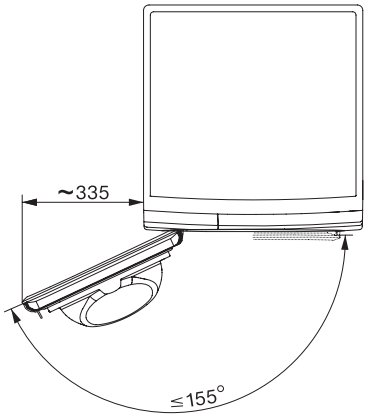

T1 drawing, facia 5 degree, measures in mm