KS 7793 D

Built-in refrigerator, 178 cm niche height
with PerfectFresh Active, FlexiLight 2.0 and FlexiTray for maximum convenience.



- Fresh 5x longer with active humidification – PerfectFresh Active
- Individually adjustable glass shelf lighting with FlexiLight 2.0
- Uniform temperature distribution inside the appliance – DynaCool
- Easy to remove items thanks to pivotable glass shelf – FlexiTray
- Door shelf heights can be adjusted individually

EAN: 4002516421078 / Material number: 11738410 /
Old Material Number: 36779301AUS

General information	
Model identifier	KS 7793 D
Manufacturer material number	11738410
EAN number	4002516421078
Marketing class	Diamond
Appliance category	
Refrigerator	•
Construction type	
Built-in appliance	•
Integrated appliance	•
Door hinge	right
Convertible door hinging	•
Side-by-side enabled	•
Design	
Fan lighting	•
Freshness system lighting	•
User convenience	
Fridge zone lighting	FlexiLight 2,0
Networking with Miele@home	•
Freshness system	PerfectFresh Active
Fine adjustment inner door	•
ComfortClean	•
ComfortSize	•
DynaCool	•
Party mode	•
Holiday mode	•
SoftClose	•
SelfClose	•
Ice/Water dispenser with mains water connection	No
Control system	
Operating concept	FreshTouch
Fridge compartment can be switched off	No
SuperCool	•
No. of temperature zones	2
Sabbath mode	•
Fridge/Fridge section	
No. of shelves	4
of which illuminated	3
Chrome-plated metal bottle rack	•
No. of crisper drawers	3
Dry back wall	CleanSteel
CompactCase	•
FlexiTray	•
Number of inner door racks for tinned food	3
Door rack for bottles	2
Door shelves	5
Safety	
Lock function	•

KS 7793 D

Built-in refrigerator, 178 cm niche height
with PerfectFresh Active, FlexiLight 2.0 and FlexiTray for maximum convenience.



EAN: 4002516421078 / Material number: 11738410 /
Old Material Number: 36779301AUS

Acoustic door alarm	•
Optical door alarm	•
Technical data	
Niche width in mm min.	560
Niche width in mm max.	570
Niche height in mm min.	1772
Niche height in mm max.	1788
Niche depth in mm	550
Appliance width in mm	559
Appliance height in mm	1770
Appliance depth in mm	546
Weight in kg	74,5
Door hinge technology	Fixed door
Max. door front weight – refrigerator, in kg	26
Climate range	SN-T
Refrigerator compartment in l	198
including PerfectFresh zone in l	98
Total usable capacity in l	296
Current consumption (mA)	1200
Voltage in V	220-240
Fuse rating in A	10
Number of phases	1
Frequency in Hz	50-60
Length of supply lead in m	2,2
Replacing lamps	Service
Accessories included	
Egg tray	•
Water filter	Nein
PerfectFresh organisation box	•

KS 7793 D

Built-in refrigerator, 178 cm niche height
with PerfectFresh Active, FlexiLight 2.0 and FlexiTray for maximum convenience.

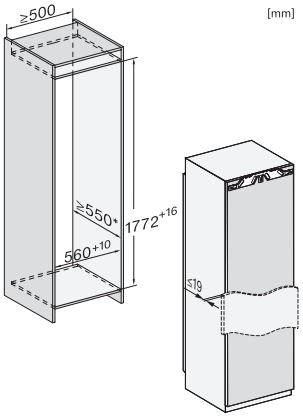

K7733E, K7763E, K7732D, K7732E, K7734F, K7764E, K7743E, K7744E, K7773D, K7774D, built-in

*The declared energy consumption was calculated in a 560 mm deep niche. The appliance is fully functional in a 550 mm niche but the energy consumption will be slightly higher.

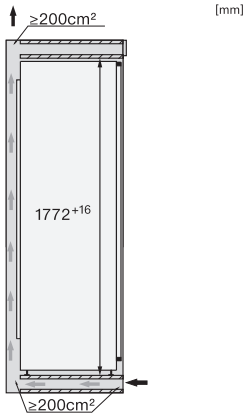

K7733E, K7763E, K7732E, K7734F, K7764E, K7743E, K7744E, K7773D, K7774D, side view