KM 8685-2 FL
Induction hob with onset controls
800 mm | Full-surface | M Sense ready



- -
- Precise settings via 6 MultiSlide sliders including intelligent networking
- Prepared for cooking and frying assistance with M Sense cookware – M Sense ready
- Shortest heat-up times thanks to Booster level
- A width of 800 mm for surface-mounted or flush-fit installation

EAN: 4002516975748 / Material number: 12948310 /
Old Material Number: 26I86854GB

General information	
Model identifier	KM 8685-2 FL
Manufacturer material number	12948310
EAN number	4002516975748
Heating type	
Heating type	Induction
Construction type	
Independent of cooker	•
Design	
Elegant glass ceramic surface	•
Ceramic surface colour	Black
Flush	•
Surface-mounted installation	•
Cooking zone details	
Number of cooking zones	1
Number of cooking areas	1
Maximum number of pans	6
1st cooking zone/cooking area	
Position	Can be selected freely
Type	Full area
Size in mm	740x380
Max. rating in W	2600
Max. Booster power rating in W	3650
User convenience	
Networking with Miele@home	•
Con@ctivity	•
Pan and pan size recognition	•
M Sense ready	•
Operation via sensor controls	MultiSlide
Hood control via hob	•
Display colour	White
Intelligent pan recognition	•
Professional mode	•
Stop & Go function	•
Wipe protection	•
Recall function	•
Minute minder	•
Safety switch-off	•
Auto heat-up	•
Keeping warm	•
Individual setting options (e.g. buzzers)	•
Assistance programmes	•
Efficiency and sustainability	
Power rating in off mode in W	0.3
Power rating in standby mode in W	0.8
Power rating in networked standby in W	2.0
Time until automatic switch to off mode in min	10
Time until automatic switch to standby in min	10

KM 8685-2 FL
Induction hob with onset controls
800 mm | Full-surface | M Sense ready



EAN: 4002516975748 / Material number: 12948310 /
Old Material Number: 26186854GB

Time until automatic switch to networked standby in min	10
Cleaning and care	
Easy to clean ceramic glass	•
Safety	
Safety switch-off	•
Lock function	•
System lock	•
Integrated cooling fan	•
Overheating protection	•
Residual heat indicator	•
Technical data	
Dimensions (H x W x D) in mm	51 x 800 x 520
Dimensions (W x D) in mm	800 x 51 x 520
Dimensions in mm (width)	800
Dimensions in mm (height)	51
Dimensions in mm (depth)	520
Cut-out dimensions (W x D) with surface-mounted installation in mm	780 mm x 500 mm
Cut-out dimensions (W x D) with flush-fit installation in mm	780/804 x 500/524
Casing height incl. connection box in mm	51
Cutout dimensions in mm (width) with surface-mounted installation	780 mm
Cutout dimensions in mm (depth) with surface-mounted installation	500 mm
Internal cutout dimensions in mm (width) with flush installation	780
Internal cutout dimensions in mm (depth) with flush installation	500
Weight in kg	19
External cutout dimensions in mm (width) with flush installation	804
External cutout dimensions in mm (depth) with flush installation	524
Total rated load in kW	9.20
Length of supply lead in m	1.6
Voltage in V	230
Frequency in Hz	50-60
Accessories included	
Mains cable	Yes

KM 8685-2 FL
Induction hob with onset controls
800 mm | Full-surface | M Sense ready

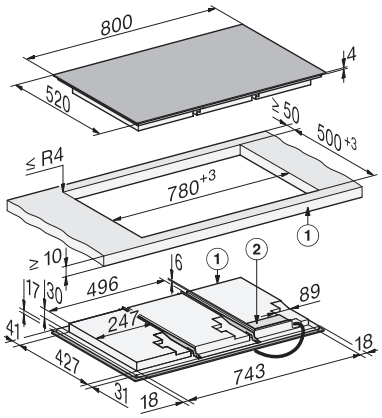

KM8685-2FL, KM8685-2FL MattFinish surface-mounted (*Fußnote) Installation drawing

1) front, 2) Mains connection box, The mains connection cable (L = 1440 mm) is enclosed loose

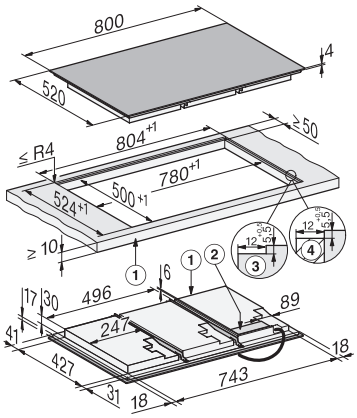

KM8685-2FL MattFinish, flush (*Fußnote) (Installation drawing)

1) front, 2) Mains connection box, The mains connection cable (L = 1440 mm) is enclosed loosely, 3) Step milling natural stone worktop, 4) Wooden strip 12 mm (no supplied accessories)