Miele

F 2813 Vi
MasterCool freezer
For high-end design and technology on a large scale.



- Push2open for convenient door-opening assistance
- Light floods the interior thanks to LED elements – BrilliantLight
- Fresh ice cubes from the IceMaker with mains water connection
- Convenient control thanks to colour touch display MasterSensor

EAN: 4002516712640 / Material number: 12366230 /
Old Material Number: 37281300EU1

General information	
Model identifier	F 2813 Vi
Manufacturer material number	12366230
EAN number	4002516712640
Marketing class	Diamond
Appliance category	
Freezer	•
Construction type	
Built-in appliance	•
Integrated appliance	•
Door hinge	Left
Convertible door hinging	•
Side-by-side enabled	•
Design	
Lighting	BrilliantLight
User convenience	
Networking with Miele@home	•
Operating concept	MasterSensor
Sabbath mode	•
NoFrost	•
SoftClose	•
IceMaker with mains water connection	•
Push2open	•
FullAccess	•
EasyClean	•
MaxLoad hinge	•
Control system	
SuperFreeze	•
No. of temperature zones	1
Eco mode	•
Freezer/Freezer section	
No. of shelves/surfaces	3
Number of freezer baskets	2
Door baskets – small	1
Door baskets – large	3
Efficiency	
Energy efficiency class (A–G)	E
Annual energy consumption in kWh	321,00
Energy consumption in 24 h in kWh	0,79
Safety	
Lock function	•
Acoustic door alarm	•
Acoustic temperature alarm	•
Optical door alarm	•
Optical temperature alarm	•
Technical data	
Niche width in mm min.	762
Niche width in mm max.	765

F 2813 Vi
MasterCool freezer
For high-end design and technology on a large scale.



EAN: 4002516712640 / Material number: 12366230 /
Old Material Number: 37281300EU1

Niche height in mm min.	2134
Niche height in mm max.	2164
Niche depth in mm	629
Appliance width in mm	756
Appliance height in mm	2125
Appliance depth in mm	608
Weight in kg	156,0
Door hinge technology	Fixed door
Max. door front weight – refrigerator, in kg	28
Climate range	SN-T
4* freezer compartment in l	445
Storage time in case of fault in h	10
Freezer capacity in kg/24 h	23,00
Acoustic airborne noise emission class (A–D)	D
Sound emissions in dB(A) re 1 pW	42
Voltage in V	220-240
Fuse rating in A	10
Number of phases	1
Frequency in Hz	50-60
Length of supply lead in m	3,0
Replacing lamps	Service
Accessories included	
Water filter	Nein
Available display languages	
Available display languages via MultiLingua	□□□□□□□□, □□, □□□□, deutsch, dansk, english, english (AU), english (CA), english (GB), english (US), eesti, suomi, français, français (CA), français (FR), ελληνικά, italiano, □□□, □□□, hrvatski, latviesu, lietuviu, bahasa malaysia, nederlands, norsk, polski, português, română, русский, svenska, srpski, slovenčina, slovenščina, español, čeština, türkçe, українська, magyar

F 2813 Vi
MasterCool freezer
For high-end design and technology on a large scale.

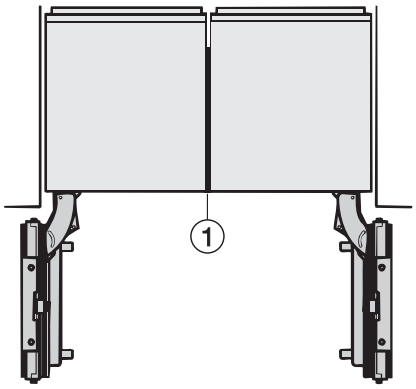

Side-by-side, MasterCool, without partition wall, with heating mat (Sketch) (with footnote)

1) Heating mat KSK 2001 (EU, AUS, CN) or KSK 2002 (US, CA, MX, BR)

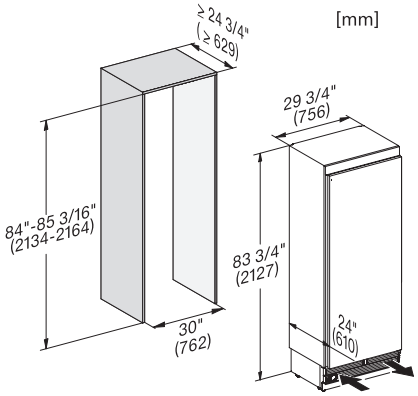

F2812Vi, F2813Vi, F2802Vi, F2811Vi, F2801Vi, MasterCool, inner space, installation drawings

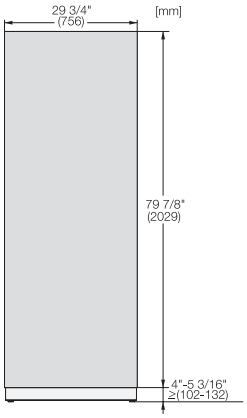

KFP3005ed/cs, KFP3004ed/cs, Front panel, Front dimensions, MasterCool II, installation drawings

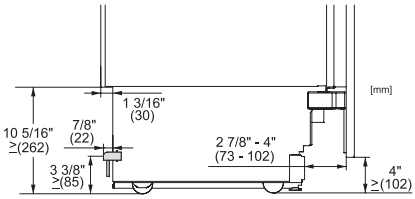

Sideview, MasterCool, Sketch

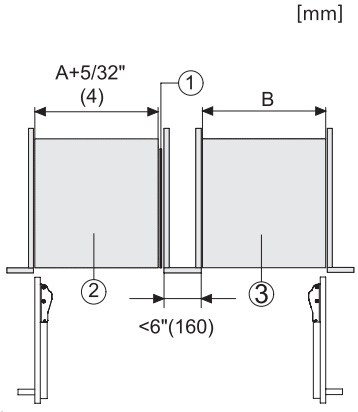

Side-by-Side, MasterCool, footnote, installation drawings

1. KSK 2001/2002, 2. Device A, 3. Device B, A = niche device A, B = niche device B

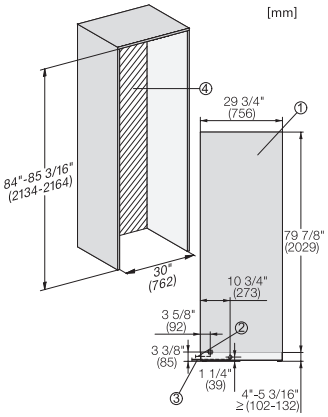

F2802Vi, F2812Vi, F2813Vi, F2812SF, F2801Vi, F2811Vi, F2811SF, installation, MasterCool, installation drawings

1. View from the front, 2. Mains Connection cable, L = 3000 mm (118 inch), 3. Water inlet positon, L = 2000 mm (not for KON USA), 4. No water/ELT conections permitted in this area

F 2813 Vi
MasterCool freezer
For high-end design and technology on a large scale.

[mm]

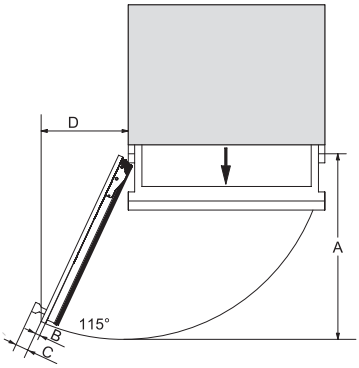

Opening angle 90°/115°, right side stop, MasterCool (Sketch) with footnote

A) Appliance door , F 2411 Vi: 525 mm (20 2/3 inch);, F 2412 Vi, F 2412 SF, F 2413Vi, F 2472 Vi, F 2472 SF: 525 mm (20 2/3 inch);, F 2671 Vi: 677 mm (26 2/3 inch); , F 2672 Vi, F 2672 SF: 677 mm (26 2/3 inch);, F 2812 SF, F 2812 Vi, F 2813 Vi: 829 mm (32 2/3 inch);, F 2912 Vi, F 2912 SF: 982 mm (38 2/3 inch);, B) Furniture front (max. 38 mm) (1 1/2 inch), C) Door handle, D) Distance from the door to the wall (without furniture front and door handle): , F 2411 Vi: 237 mm (9 1/3 inch);, F 2412 Vi, F 2412 SF, F 2472 Vi, F 2472 SF: 237 mm (9 1/3 inch);, F 2672 Vi, F 2672 SF: 296 mm (11 2/3 inch);, F 2811 Vi: 363 mm (14 1/3 inch);, F 2812 SF, F 2812 Vi: 363 mm (14 1/3 inch);, F 2912 Vi, F 2912 SF: 428 mm (16 7/8 inch);, E) ONLY valid for SF versions: A + 25 mm (1 inch)