CS 7612 FL
SmartLine element
with induction PowerFlex cooking zone

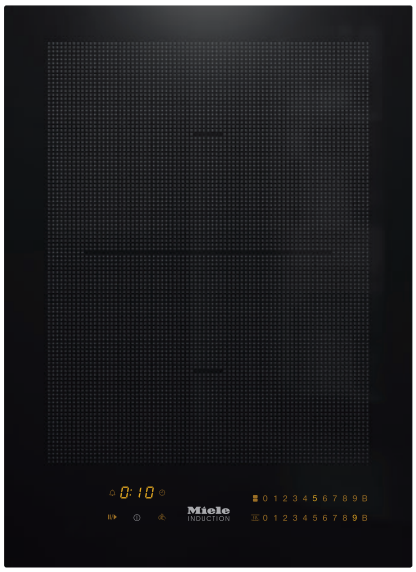

- Intuitive quick selection via number sequences – Smart Select
- Elegant design – for flush or raised installation
- Seamlessly integrates with any SmartLine element
- Versatile and fast – 2 cooking zones incl. 1 PowerFlex area
- Shortest heating-up times – TwinBooster

EAN: 4002515893036 / Material number: 10684390 /
Old Material Number: 27761250GB

General information	
Model identifier	CS 7612 FL
Manufacturer material number	10684390
EAN number	4002515893036
Marketing class	Platinum
Heating type	
Heating type	Induction
Construction type	
SmartLine	•
Design	
Elegant glass ceramic surface	•
Ceramic surface colour	Black
Flush	•
Surface-mounted installation	•
Cooking zone details	
Number of cooking zones	2
PowerFlex cooking zones	
No.	2
Size in mm	Ø 150 – 230
Max. rating in W	2100
Max. Booster power rating in W	3000
Max. TwinBooster power rating in W	3650
1st cooking zone/cooking area	
Position	Centred
Type	PowerFlex
Size in mm	230x390
Max. rating in W	2100
Max. Booster power rating in W	3000
Max. TwinBooster power rating in W	3650
User convenience	
Pan and pan size recognition	•
Operation via sensor controls	SmartSelect
Display colour	Yellow
Permanent pan recognition	•
Stop & Go function	•
Wipe protection	•
Recall function	•
Minute minder	•
Safety switch-off	•
Auto heat-up	•
Keeping warm	•
Individual setting options (e.g. buzzers)	•
Cleaning and care	
Easy to clean ceramic glass	•
Safety	
Safety switch-off	•
Lock function	•
System lock	•

CS 7612 FL
SmartLine element
with induction PowerFlex cooking zone

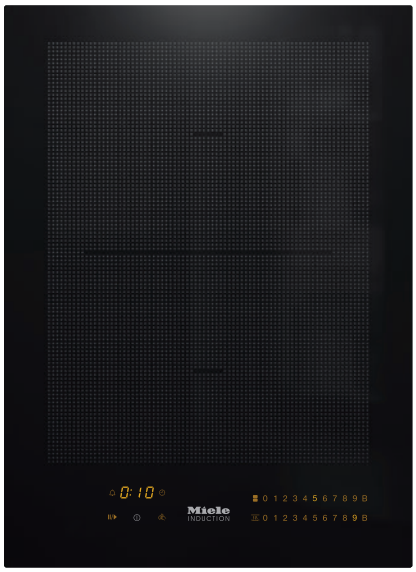

EAN: 4002515893036 / Material number: 10684390 /
Old Material Number: 27761250GB

Integrated cooling fan	•
Overheating protection	•
Residual heat indicator	•
Technical data	
Dimensions (H x W x D) in mm	51 x 378 x 520
Dimensions in mm (width)	378
Dimensions in mm (height)	51
Dimensions in mm (depth)	520
Cut-out dimensions (W x D) with flush-fit installation in mm	358/382 x 500/524
Casing height incl. connection box in mm	51
Cutout dimensions in mm (width) with surface-mounted installation	358 mm
Cutout dimensions in mm (depth) with surface-mounted installation	500 mm
Internal cutout dimensions in mm (width) with flush installation	358
Internal cutout dimensions in mm (depth) with flush installation	500
Weight in kg	7
External cutout dimensions in mm (width) with flush installation	382
External cutout dimensions in mm (depth) with flush installation	524
Total rated load in kW	3,60
Length of supply lead in m	1,4
Voltage in V	230
Frequency in Hz	50-60
Accessories included	
Mains cable	Yes

CS 7612 FL
SmartLine element
with induction PowerFlex cooking zone

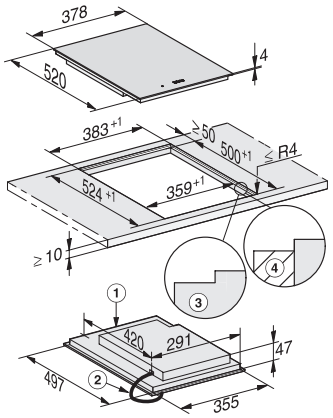

CS7612-1FL, CS7612FL, flush (installation drawing)

1) Front, 2) Mains connection cable, L = 2000 mm, 3) Stepped cut-out, 4) Wooden Frame 12 mm (supplied loose),

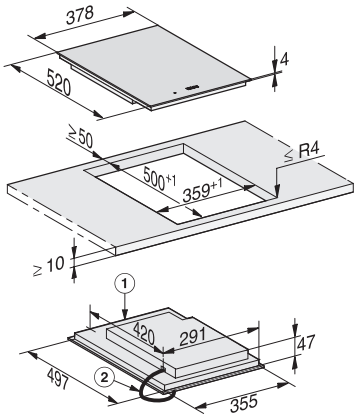

CS7612-1FL, CS7612FL, (installation drawing)

1) Front, 2) Mains connection cable, L = 2000 mm

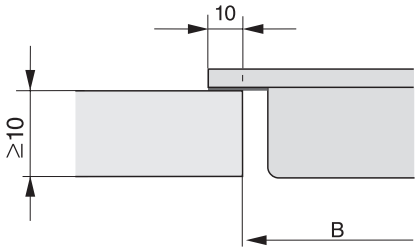

CS 7000 FL (Installation drawing)

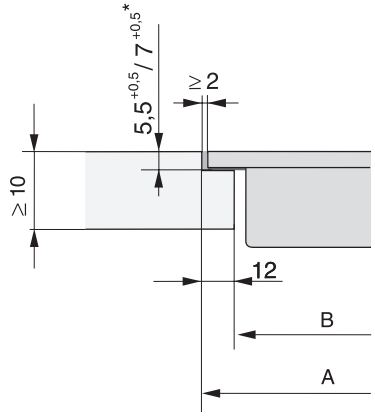

CS 7000 FL, flush (Installation drawing)

*7+0,5 = CS7611 (Wok)

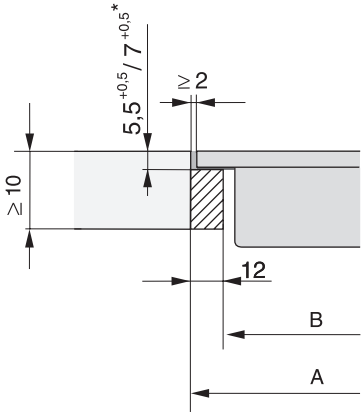

CS 7000 FL, flush (Installation drawing)

*7+0,5 = CS7611 (Wok)