H 7244 BP
Compact oven
seamless design with clear text, networking & pyrolytic cleaning.



- Clear text display with sensor controls – DirectSensor S
- Minimal cleaning effort – Pyrolytic cleaning
- Especially light dough and nicely browned crusts – Moisture plus
- Network-enabled WiFi appliance – Miele@home
- Achieve perfect results with ease – automatic programmes

EAN: 4002516132455 / Material number: 11104160 / Old Material Number: 22724435D

General information	
Model identifier	H 7244 BP
Manufacturer material number	11104160
EAN number	4002516132455
Marketing class	Gold
Construction type and design	
VitroLine	•
Construction type and design	
Built-in oven	•
Colour	Graphite grey
Convenience features	
Rapid heat-up	•
Operating modes	
Defrosting	•
Auto roast	•
Fan plus	•
Moisture plus with Fan plus	•
Intensive bake	•
Moisture plus	•
Conventional heat	•
Bottom heat	•
Fan grill	•
Grill	•
Eco hot air	•
Automatic programmes	•
User convenience	
Networking with Miele@home	•
Display	DirectSensor S
SoftOpen	•
SoftClose	•
MultiLingua	•
Time of day display	•
Clock synchronisation	•
Minute minder	•
Programmable start of cooking duration	•
Programmable end of cooking duration	•
Programmable cooking duration	•
Actual temperature display	•
Target temperature display	•
Buzzer when desired temperature is reached	•
Recommended temperature	•
Individual settings	•
Efficiency	
Energy efficiency class (A+++ – D)	A+
Power rating in off mode in W	0,3
Power rating in standby mode in W	0,8
Power rating in networked standby in W	2,0
Time until automatic switch to standby in min	20

H 7244 BP
Compact oven
seamless design with clear text, networking & pyrolytic cleaning.



EAN: 4002516132455 / Material number: 11104160 / Old Material Number: 22724435D

Time until automatic switch to networked standby in min	20
Time until automatic switch to off mode in min	20
Cleaning and care	
Pyrolytic self-cleaning	•
Hinged grill element	•
CleanGlass door	•
Steam techn./water supply	
Steam generator power in kW	1,10
Fresh water container volume in l	0,3
Suction tube for drawing in water	•
Safety	
Appliance cooling system and touch-cool front	•
Safety switch-off	•
System lock	•
Door lock during pyrolytic cleaning	•
Technical data	
Oven compartment volume in l	49
No. of shelf levels	3
Numbered shelf levels	•
Oven light	1 halogen spot
Plug type	Schuko plug with earth
Niche width min. in mm	560
Niche width max. in mm	568
Niche height min. in mm	450
Niche height max. in mm	452
Niche depth in mm	550
Weight in kg	38,0
Total rated load in kW	3,20
Length of supply lead in m	1,50
Voltage in V	220-240
Frequency in Hz	50
Fuse rating in A	16
Number of phases	1
Mains cable with plug	•
Replacing lamps	Customer
Accessories included	
Baking tray with PerfectClean HBB 71	1
Universal tray with PerfectClean HUBB 71	1
Baking and roasting rack PyroFit	1
PyroFit FlexiClip runners	1
Removable PyroFit side runners (pair)	1
Descaling tablets	2

H 7244 BP
Compact oven
seamless design with clear text, networking & pyrolytic cleaning.



EAN: 4002516132455 / Material number: 11104160 / Old Material Number: 22724435D

Available display languages	
Available display languages via MultiLingua	□□□□□□□, □□, □□□, deutsch, dansk, english, suomi, français, ελληνικά, italiano, □□□, □□□, hrvatski, bahasa malaysia, nederlands, norsk, polski, português, română, русский, svenska, srpski, slovenčina, slovenščina, español, čeština, türkçe, українська, magyar

H 7244 BP
Compact oven
seamless design with clear text, networking & pyrolytic cleaning.

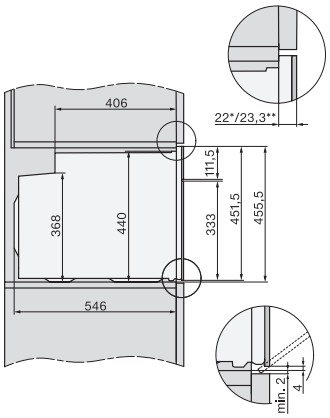

side view H7000 M, installation drawings

22 mm – glass, 23,3 mm – metal

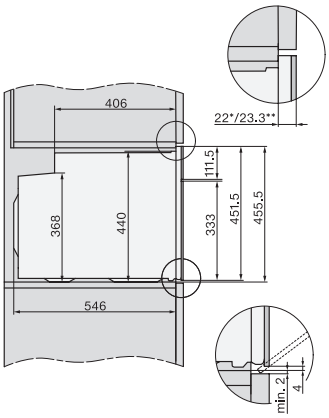

side view H7000 M, installation drawings, GB, AU

22 mm – glass, 23,3 mm – metal

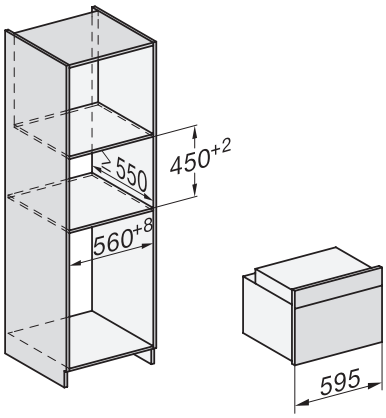

built-in H7000 M, installation drawing

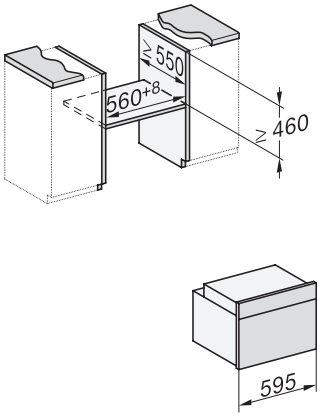

built-in H7000 M build-under, installation drawing

If the oven is to be installed under a hob, follow the instructions for installing the hob and the height of the hob.

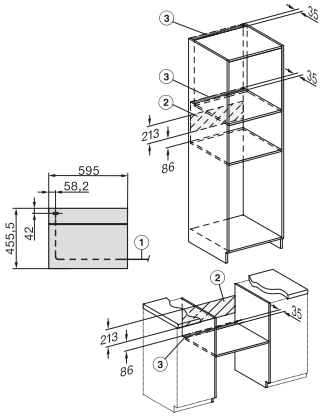

Installation H7000 M, installation drawing

1) Mains connection cable, L=1500 mm, 2) No connection in this area, 3) Lüftungsausschnitt min. 150 cm²

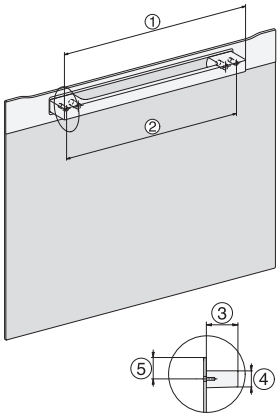

H7000 handle, installation drawing

1) 400 mm, 2) 360 mm, 3) 47 mm, 4) 24 mm, 5) 32.5 mm

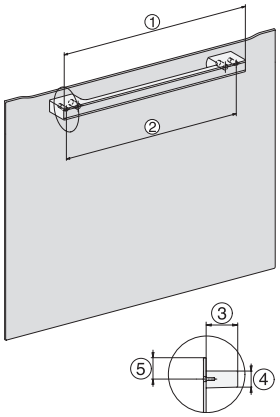

H7000 handle, glass, installation drawings

1) 400 mm, 2) 360 mm, 3) 47 mm, 4) 27 mm, 5) 32.5 mm

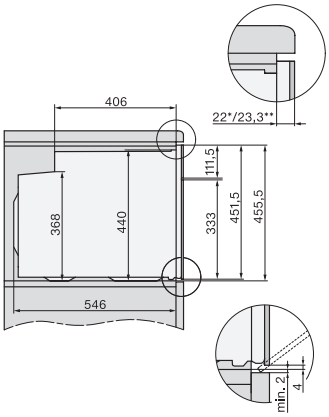

side view H7000 M build-under, installation drawings

22 mm – glass, 23,3 mm – metal