H 7464 BPX
Handleless oven
seamless design with food probe and LED lighting.



- Large clear text display with sensor controls – DirectSensor
- Minimal cleaning effort – Pyrolytic cleaning equipment& PyroFit
- Especially light dough and nicely browned crusts – Moisture plus
- Ensures your food won't overcook – TasteControl
- Network-enabled WiFi appliance – Miele@home

EAN: 4002516684268 / Material number: 12305080 /
Old Material Number: 22746485D

General information	
Model identifier	H 7464 BPX
Manufacturer material number	12305080
EAN number	4002516684268
Marketing class	Gold
Construction type and design	
ArtLine	•
Handleless	•
Construction type and design	
Built-in oven	•
Colour	Obsidian black matt
Convenience features	
TasteControl	•
Rapid heat-up	•
Pre-heating	•
Food probe	With cable
Keeping warm	•
Crisp function	•
Operating modes	
Defrosting	•
Auto roast	•
Moisture plus with Auto roast	•
Fan plus	•
Moisture plus with Fan plus	•
Intensive bake	•
Moisture plus with Intensive bake	•
Moisture plus	•
Moisture plus with Conventional heat	•
Conventional heat	•
Bottom heat	•
Fan grill	•
Grill	•
Eco hot air	•
Automatic programmes	•
Country-specific automatic programmes	•
User convenience	
Networking with Miele@home	•
Display	DirectSensor
SoftOpen	•
Touch2Open	•
MultiLingua	•
Programmable timed steam injection	•
Time of day display	•
Clock synchronisation	•
Date display	•
Minute minder	•
Programmable start of cooking duration	•
Programmable end of cooking duration	•

Miele

H 7464 BPX
Handleless oven
seamless design with food probe and LED lighting.



EAN: 4002516684268 / Material number: 12305080 /
Old Material Number: 22746485D

Programmable cooking duration	•
Actual temperature display	•
Target temperature display	•
Buzzer when desired temperature is reached	•
Recommended temperature	•
User programmes	•
Individual settings	•
Efficiency	
Energy efficiency class (A+++ – D)	A+
Automatic residual heat utilisation	•
Power rating in off mode in W	0,3
Power rating in standby mode in W	0,8
Power rating in networked standby in W	2,0
Time until automatic switch to standby in min	20
Time until automatic switch to networked standby in min	20
Time until automatic switch to off mode in min	20
Cleaning and care	
Pyrolytic self-cleaning	•
Hinged grill element	•
CleanGlass door	•
Steam techn./water supply	
Steam generator power in kW	1,10
Fresh water container volume in l	0,3
Suction tube for drawing in water	•
Safety	
Appliance cooling system and touch-cool front	•
Safety switch-off	•
System lock	•
Door lock during pyrolytic cleaning	•
Sensor lock	•
Technical data	
Oven compartment volume in l	76
No. of shelf levels	5
Numbered shelf levels	•
Oven light	1 LED spot
Plug type	Schuko plug with earth
Niche width min. in mm	560
Niche width max. in mm	568
Niche height min. in mm	590
Niche height max. in mm	595
Niche depth in mm	550
Appliance dimensions (W x H x D) in mm	595 x 596 x 568
Weight in kg	47,0
Total rated load in kW	3,60
Length of supply lead in m	1,50
Voltage in V	220-240
Frequency in Hz	50
Fuse rating in A	16

H 7464 BPX
Handleless oven
seamless design with food probe and LED lighting.



EAN: 4002516684268 / Material number: 12305080 /
Old Material Number: 22746485D

Number of phases	1
Mains cable with plug	•
Replacing lamps	Service
Accessories included	
Baking tray with PerfectClean HBB 71	1
Universal tray with PerfectClean HUBB 71	1
Baking and roasting rack PyroFit	1
PyroFit FlexiClip runners	1
Wired food probe	1
Removable PyroFit side runners (pair)	1
Descaling tablets	2
Available display languages	
Available display languages via MultiLingua	□□□□□□□, □□, □□□□, deutsch, dansk, english, suomi, français, ελληνικά, italiano, □□□, □□□, hrvatski, bahasa malaysia, nederlands, norsk, polski, português, română, русский, svenska, srpski, slovenčina, slovenščina, español, čeština, türkçe, українська, magyar

H 7464 BPX
Handleless oven
seamless design with food probe and LED lighting.

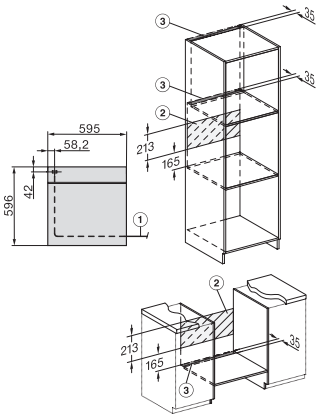

installation H7000 XL, installation drawing

1) Netzanschlussleitung, L=1500 mm, 2) In diesem Bereich kein Anschluss, 3) Lüftungsausschnitt min. 150 cm²

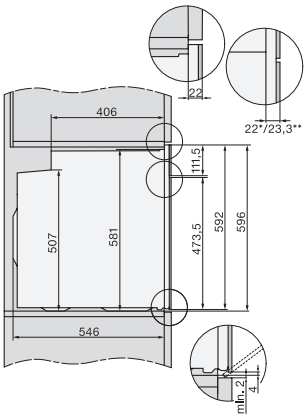

side view H7000 XL, installation drawings

22 mm – glass, 23,3 mm – metal

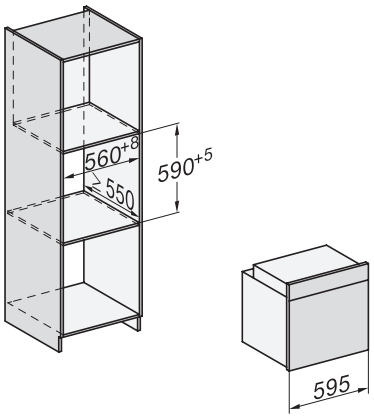

built-in H7000 XL, installation drawing

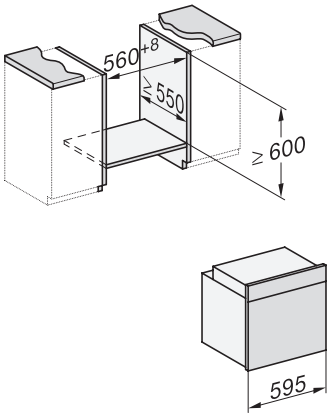

Installation H7000 XL underframe, installation drawings

If the oven is to be installed under a hob, follow the instructions for installing the hob and the height of the hob.

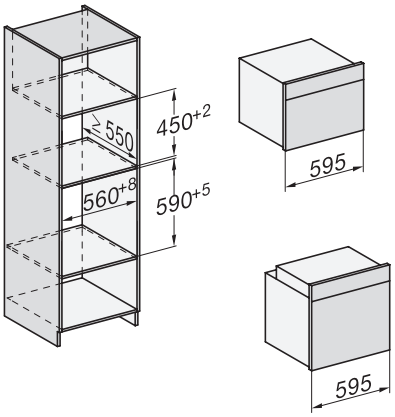

Installation H7000 BM XL, installation drawings

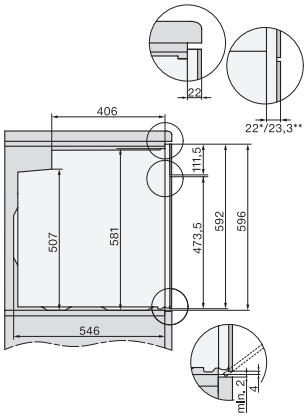

side view H7000 XL build-under, installation drawing

22 mm – glass, 23,3 mm – metal

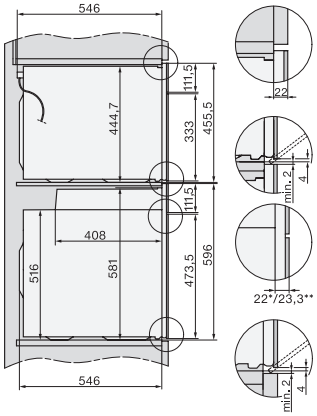

side view Kombi BM XL, installation drawings

22 mm – glass, 23,3 mm – metal

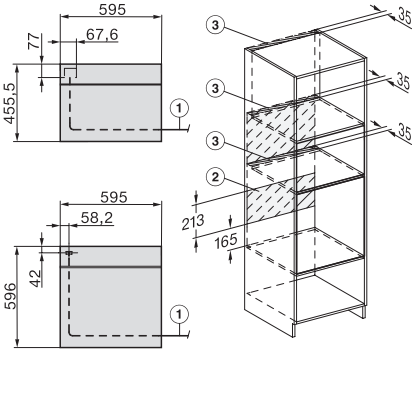

Installation Kombi BM XL, installation drawings

1) Mains connection cable, L=2000 mm, 2) No connection in this area, 3) Ventilation cut-out min. 150 cm².