CVA 7440
Built-in coffee machine
In a perfectly combinable design with patented CupSensor for perfect coffee.



- Large clear-text display with sensor controls – DirectSensor
- Perfectly positioned: thanks to the patented CupSensor
- Two coffees at once at the touch of a button – OneTouch for Two
- Always freshly ground – AromaticSystemFresh
- Convenient when hosting lots of guests – coffee/tea pot function

EAN: 4002516825166 / Material number: 12642250 /
Old Material Number: 29744050GBX

General information	
Model identifier	CVA 7440
Manufacturer material number	12642250
EAN number	4002516825166
Marketing class	Gold
Construction type and design	
Built-in bean-to-cup coffee machine	•
VitroLine	•
ArtLine	•
Construction type and design	
Colour	Pearl beige
Convenience features	
AromaticSystemFresh	•
OneTouch preparation	•
OneTouch for Two preparation	•
DoubleShot	•
Programmable User profiles	10
Conical grinder to preserve the taste	•
Selectable grinder setting	•
Programmable amount of coffee	•
Programmable amount of water	•
Programmable water temperature	•
Amount of milk can be programmed	•
Programmable amount of milk froth	•
Pre-brewing programmable	•
TeaTimer	•
User convenience	
Networking with Miele@home	•
Display	DirectSensor
CupSensor	•
PerformanceMode	•
EasyClick milk container	•
ComfortDoor	•
Concealed door handle	•
BrilliantLight	•
Expert mode	•
MultiLingua	•
No. of bean types	1
No. of bean containers	2
Capacity of bean container A in g	300
Capacity of bean container B in g	300
Bean container capacity, total in g	600
Removable bean container	•
Capacity of water container in l	2,7
Milk container capacity in l	0,7
Capacity of waste container in capsules	17
Drip tray capacity	1,6
Easily accessible containers	•

CVA 7440
Built-in coffee machine
In a perfectly combinable design with patented CupSensor for perfect coffee.



EAN: 4002516825166 / Material number: 12642250 /
Old Material Number: 29744050GBX

Time of day display	•
Clock synchronisation	•
Date display	•
Programmable switch-on time	•
Programmable switch-off time	•
Programmable standby time	•
Programmable settings	•
Drink specialities	
Selectable beverage portion size in ml	20-300
Ristretto, single	•
Ristretto, double	•
Espresso, single	•
Espresso, double	•
Coffee, single	•
Coffee, double	•
Long coffee, single	•
Long coffee, double	•
Cappuccino, single	•
Hot milk, single	•
Latte macchiato, double	•
Milk froth, single	•
Milk froth, double	•
Espresso macchiato, single	•
Espresso macchiato, double	•
Cappuccino italiano, single	•
Cappuccino italiano, double	•
Flat white, single	•
Flat white, double	•
Café au lait, single	•
Café au lait, double	•
Caffè latte, single	•
Caffè latte, double	•
Caffè americano, single	•
Caffè Americano, double	•
Long black, single	•
Long black, double	•
Warm water, single	•
Warm water, double	•
Hot water, single	•
Hot water, double	•
Black tea, single	•
Black tea, double	•
Herbal tea, single	•
Herbal tea, double	•
Fruit tea, single	•
Fruit tea, double	•
Green tea, single	•
Green tea, double	•

CVA 7440
Built-in coffee machine
In a perfectly combinable design with patented CupSensor for perfect coffee.

EAN: 4002516825166 / Material number: 12642250 /
Old Material Number: 29744050GBX

White tea, single	•
White tea, double	•
Japanese tea, single	•
Japanese tea, double	•
Chai latte, single	•
Chai latte, double	•
Coffee pot	•
Teapot	•
Cappuccino, double	•
Latte macchiato, double	•
Latte macchiato, single	•
Efficiency	
Energy-saving eco-mode selectable	•
Power rating in standby mode in W	<=0,3
Power rating in networked standby in W	<=2,0
Time until automatic switch to off mode in min	20
Time until automatic switch to standby in min	20
Time until automatic switch to networked standby in min	20
Cleaning and care	
Manual descaling	•
Automatic rinsing of milk pipework with water from the water container	•
Convenient cleaning programmes	•
Automatic rinsing function	•
ComfortClean	•
Removable milk pipework	•
Removable brew unit	•
Programmable water hardness	•
Safety	
System lock	•
Technical data	
Min niche width in mm	560
Max niche width in mm	568
Min niche height in mm	450
Max niche height in mm	452
Niche depth in mm	500
Height-adjustable serving spout in cm	16,5
Height-adjustable serving spout in cm	4,0
Appliance width in mm	595
Appliance height in mm	455
Appliance depth in mm	475
Depth with door open in cm	108,0
Total rated load in kW	1,45
Voltage in V	220-240
Fuse rating in A	13
Number of phases	1
Length of supply lead in m	2,0
Accessories included	
Milk container made of glass	•

CVA 7440
Built-in coffee machine
In a perfectly combinable design with patented CupSensor for perfect coffee.



EAN: 4002516825166 / Material number: 12642250 /
Old Material Number: 29744050GBX

Available display languages	
Available display languages via MultiLingua	□□□□□□□, □□, □□□□, deutsch, dansk, english, english (AU), english (CA), english (GB), english (US), suomi, français, français (CA), français (FR), ελληνικά, italiano, □□□, □□□, hrvatski, bahasa malaysia, nederlands, norsk, polski, português, română, русский, svenska, srpski, slovenčina, slovenščina, español, čeština, türkçe, українська, magyar

CVA 7440

Built-in coffee machine

In a perfectly combinable design with patented CupSensor for perfect coffee.

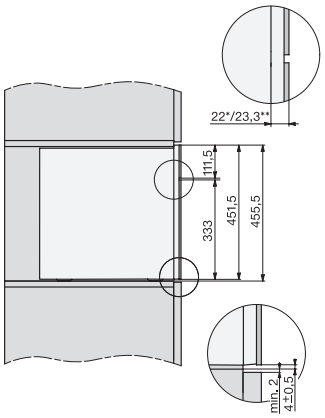

CVA7000, side view (*footnote) (installation drawing)

22 mm – Glass, 23,3 mm – Cleansteel

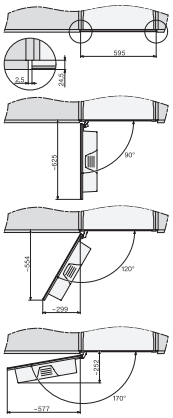

CVA7000, top view (installation drawings)

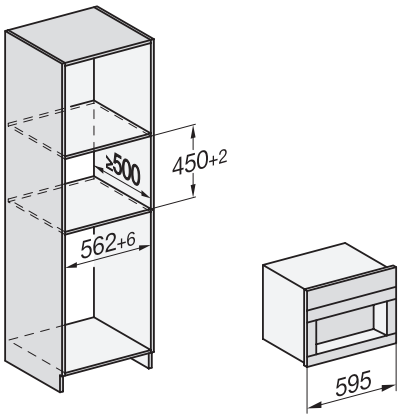

CVA7000 (installation drawings)

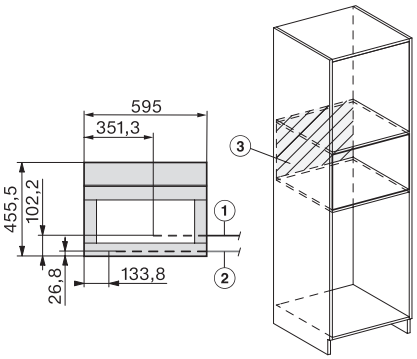

CVA7000, installation (installation drawings)

1) Mains Connection cable, L=2.000 mm, 2) Water inlet hose , L=2.000 mm, 3) No Connection in this area